WAR DEPARTMENT TECHNICAL MANUAL
TM 11-2627

TUBE TESTER I-177

WAR DEPARTMENT • AUGUST 1944

United States Government Printing Office

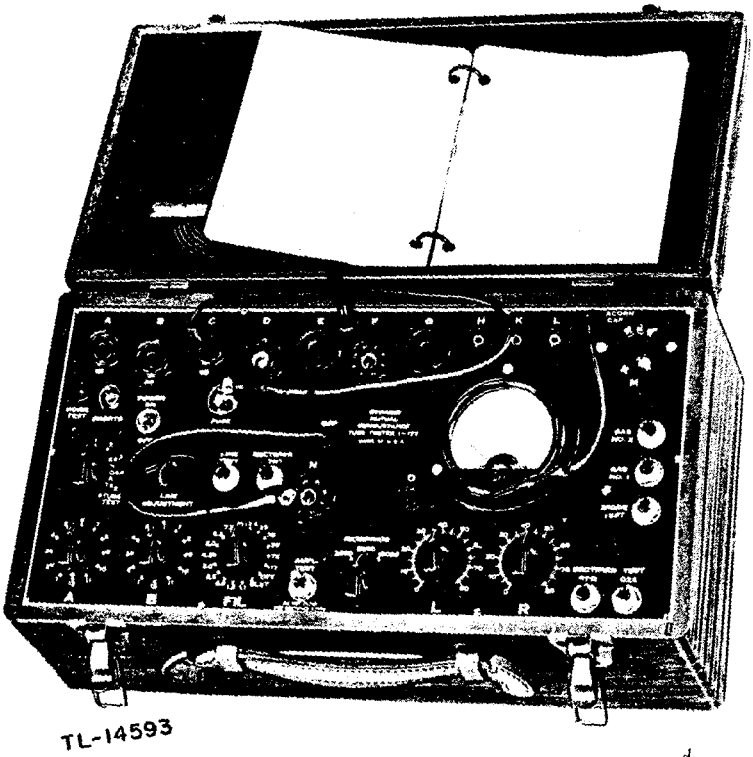

Figure 1. Tube Tester 1-177 with cover raised.

SECTION I

DESCRIPTION

1. PURPOSE. Tube Tester I-177 is an instrument used to test and measure mutual conductance values of vacuum tubes. The purpose of this manual is to acquaint the repairman with the construction, operating principles, maintenance, and use of this instrument.

2. TUBE TESTER I-177 (fig. 1).

a. This instrument is furnished both as an individual unit or as a part of Test Set I-56-K. As a part of Test Set I-56-K it fits into a compartment of Carrying Case CS-130. The weights and dimensions of the tube tester and carrying case are given below.

Equipment	*Dimension (in.)*			*Weight (lb.)*
	Height	*Width*	*Depth*	
Tube Tester I-177	5¾	15½	8½	15.75
Carrying Case CS-130	14¾	20½	9¾	25.6

b. Tube Tester I-177 is fundamentally a dynamic mutual conductance tube tester designed to provide either REPLACE-GOOD readings or mutual conductance values in micromhos for Signal Corps and commercial receiving tubes and small transmitting tubes. Noise tests of tubes can be made by connecting the input of a radio receiver to two NOISE TEST jacks. An extra topcap lead permits testing of transmitting tubes having plate connections to envelope topcaps. Special switches are provided for making gas tests of tubes. Mutual conductance values of tubes can be measured in three ranges: 0-3,000 micromhos, 0-6,000 micromhos and 0-15,000 micromhos. The tube tester operates on 105- to 125-volt, 60-cycle alternating current. Tube testing data is given in a loose-leaf booklet attached to the inside of the cover of the instrument. The power cord is wound on brackets on the inside of the cover.

SECTION II

OPERATION

3. PRELIMINARY INSTRUCTIONS. Before handling Tube Tester I-177, read the operating instructions carefully. This is a delicate electrical instrument containing a meter and parts that can easily be damaged by mishandling. Pay particular attention to caution notices.

CAUTION: After testing tubes *always* set all controls to off or safety positions as indicated in the following table. Tubes may be burned out if inserted in test sockets before the controls have been properly set.

Control	*Safety position*
POWER	OFF
SHORT-TUBE TEST	1
LINE ADJUSTMENT	Extreme counterclockwise
A	1
B	1
FIL	OFF
MICROMHOS	15,000
L	80
R	80

4. SHORTS TEST.

a. Make sure all controls are in safety positions (par. 3).

b. Plug the power cord of the tester into a suitable a-c power outlet (105 to 125 volts).

c. Determine the type number of the tube to be tested, and locate this type number in the column headed Tube Type on the loose-leaf test data cards fastened inside the cover of the instrument. If the tube is marked

with Signal Corps nomenclature, use the table in section V or the table on the back of the first card in the tester to determine the commercial equivalent.

d. Set selector switch A to the number indicated in column A.

e. Set selector switch B to the number indicated in column B.

f. Set selector switch FIL to the number indicated in the column headed Fil. volts.

g. Insert the tube in the socket indicated in the column headed Socket Letter.

NOTE: When inserting or removing a loctal or acorn tube from a socket, handle the tube as gently as possible. Tube pins pass directly through the glass seals and excessive force will crack the glass. A slight sidewise pressure applied to a loctal tube will release the lock and permit easy removal of the tube from the socket.

h. If the tube has a topcap, attach the clip of the CAP lead to the cap. For acorn tubes, use the ACORN CAP lead and clip. For tubes having a star in the Notations column (such as 807, 871, etc.), connect the plate topcap of the tube to the upper left contact of 6-pin socket C with the 12-inch lead having a clip and banana plug.

i. Set POWER switch to ON position.

j. To adjust the line voltage, press and hold down the LINE TEST button and turn the LINE ADJUSTMENT knob until the meter pointer is exactly at the LINE TEST position (at 1,500, not at the ? on the scale); then release LINE TEST button.

k. After allowing at least 30 seconds for the tube to warm up, turn the SHORT-TUBE TEST switch slowly from position 1 to positions 2, 3, 4, and 5 successively while tapping the tube with a finger and watching the SHORTS neon lamp. If the neon lamp burns continuously or glows during tapping in any of the five positions, the tube contains shorted electrodes and should be discarded without further testing (to prevent damage to the meter) unless an exception is noted on the test data card. Disregard a momentary flash of the neon lamp while the switch is being turned from one position to the next, since this is due to charging of a capacitor in the lamp circuit.

NOTE: Before discarding the tube, refer to the Notations column on the test data card to see if the tube being tested normally appears to

be shorted on certain positions of the switch. Thus, for the 1LN5, the notation "Short on 4-5" on the card means that the neon lamp will normally glow at positions 4 and 5 for good tubes. This tube has no shorts if the neon lamp stays out for positions 1, 2, and 3.

l. On tubes having several sections, the shorts test need be made only once.

5. QUALITY TEST.

a. Test the tube for shorts by following the complete procedure given in paragraph 4. If the tube is shorted, discard it without making further tests.

b. If the tube is not shorted, turn the SHORT-TUBE TEST switch to the TUBE TEST position. Do not change any of the other controls used for the shorts test.

c. Set potentiometer L to the number indicated in column L on the test data card.

d. Set potentiometer R to the number indicated in column R.

e. Set the MICROMHOS range switch at 3,000.

f. Press the button indicated in the Press column on the test data card, and read the meter on the RED-GREEN scale.

g. Normally, if the pointer stops in the GREEN sector the tube is good; if in the RED sector, the tube is defective and should be discarded. If the pointer stops in the ? sector, the tube is usable for a few more hours but should be replaced soon. For tubes in the Notations column having a note such as "OK over 160" (for example, type 40), read the meter on the 0-3,000 micromhos scale. Tubes reading higher than the value given in the Notations column are good. Good diode sections may read in the portion of the RED scale marked DIODES O.K. Only diodes reading to the left of this section (to the left of A in REPLACE on the scale) should be considered defective.

CAUTION: Do not press the red AMPL. TEST button while testing rectifier tubes. When testing small diodes, do not press either the AMPL. TEST or a RECTIFIER TEST button, because the high voltage would damage the delicate cathode. Press only the DIODE TEST button as called for on the test data card.

h. If a tube is listed two or more times on the test data card, it has two or more sections requiring individual tests, or has two input grids (for example, 6A8 pentagrid converter) requiring separate dynamic tests.

Remove the tube from the socket after the first test is completed. Then repeat the quality test in paragraph 5 for each additional listing in turn. The shorts test should be made *only* for the first listing, however. The tube section covered by a listing is identified in the Notations column on the test data cards.

6. MEASURING MUTUAL CONDUCTANCE. This procedure gives a mutual conductance reading in micromhos for an amplifier tube or amplifier section, instead of a RED-GREEN reading.

a. Test the amplifier tube or section for shorts by following the complete procedure given in paragraph 4. If the tube is shorted, discard it without making further tests.

b. If the tube is not shorted, turn the SHORT-TUBE TEST switch to the TUBE TEST position. Do not change any of the other controls used for the shorts test.

c. Set potentiometer L at G_M (replaces 60 on dial).

d. Set potentiometer R to the number indicated in column R on the test data card.

e. Set the MICROMHOS range switch to an appropriate range for measuring the value given in the Mut. Cond. column on the test data card.

f. Press the button called for in the Press column, and read the meter on the scale to which the MICROMHOS switch is set. This reading is the mutual conductance of the tube in micromhos under the element voltage conditions provided by the tube tester.

g. If a tube is listed two or more times on the test data card, remove the tube from its socket after the first test. Then repeat all tests except the shorts test for the next listing, as if testing another tube.

7. GAS TEST. This procedure determines whether or not an amplifier tube contains too much gas.

a. Carry out the shorts test procedure given in paragraph 4. If dealing with a multisection tube, the shorts test and gas test must be made on an amplifier section. The gas test does not apply to diode sections or to rectifiers.

b. Set potentiometer L at G_M (replaces 60 on dial).

c. Set the MICROMHOS range switch at 3000.

d. Hold down the GAS NO. 1 button and adjust potentiometer R until the meter reads 100 micromhos on the 0-3000 scale.

e. While holding down GAS NO. 1 button, press GAS NO. 2 button.

If the meter pointer moves upward more than one scale division, the tube contains too much gas for satisfactory operation. If the pointer movement is less than one division, the tube can be considered sufficiently free from gas.

NOTE: If the pointer cannot be brought down to 1000 micromhos by adjusting potentiometer R, set R at 82, note the position of the pointer, and press GAS NO. 2 button to see if the pointer moves upward more than one scale division. In some cases it may be necessary to let the tube warm up for a few minutes before making the gas test, since the tubes may develop gas only after filament current has been on for a period of time.

8. NOISE TEST. This procedure detects intermittent contacts between tube electrodes during the shorts test, even though the shorts are too brief to be detected by the neon SHORTS lamp.

a. After completing the conventional shorts test in paragraph 4, connect the NOISE TEST jacks on the panel of Tube Tester I-177 to the antenna and ground terminals of a radio receiver.

b. With the radio receiver turned on, with volume advanced, and with the tube tester still set as in paragraph 4*k*, tap the tube while turning the SHORT-TUBE TEST switch slowly from position 1 to 5. Loud static noises coming from the loudspeaker indicate intermittent shorts between electrodes, and mean that the tube is bad.

9. TESTING CATHODE-RAY INDICATOR TUBES. Since the function of these tubes is to indicate rather than amplify, conventional mutual conductance or quality tests cannot be made. Test data is therefore given on the last test data card rather than in numerical sequence, and is repeated here in greater detail. No shorts tests are made. The meter and controls L, R, and MICROMHOS are not used in this test. The procedure checks only the opening and closing action of the eye.

a. Turn on the tube tester and adjust the line voltage as in paragraph 4*j*.

b. Set the FIL switch at the correct filament voltage (2.5 for the 2E5 tube; 6.3 for tube types starting with 6).

c. For 2E5, 6AB5, 6E5, 6G5, 6H5, 6N5, and 6U5 tubes, set selector switch A at 12, set selector switch B at 3, and press the red AMPL. TEST button. The eye should open. Release the button, set selector switch B at 2, and again press the AMPL. TEST button. The eye should now close if the tube is good.

d. For 6AD6 and 6AF6 tubes, set selector switch B at 8, set selector switch A at 2, and press the red AMPL. TEST button. Eye No. 1 should

open, and eye No. 2 should close. Release the button, set selector switch A at 3, and again press the AMPL. TEST button. Eye No. 2 should open and eye No. 1 should close if the tube is good.

10. TESTING PILOT LAMPS.

a. To check a pilot lamp or other type of lamp having a miniature base, set selector switch FIL to the correct voltage for the lamp. This voltage is generally marked on the lamp base.

b. Turn ON the POWER switch, adjust line voltage as instructed in paragraph 4*j* and hold the lamp in the center of socket D. If the lamp lights with normal brilliancy, it is good; if it does not light, it is bad.

11. SERVICING RADIO EQUIPMENT WITH TUBE TESTER I-177. Almost all receiving tubes and the lower-powered transmitting tubes may be tested with Tube Tester I-177. The repairman should be thoroughly familiar with the operation of the tube tester as outlined in previous paragraphs of this section before attempting to make any tests.

a. Receiver Tubes. Test all tubes in the receiver for internal shorts and for quality. Install new tubes in place of those found to be defective. To prevent replacing a tube in the wrong socket, check one tube at a time.

b. Transmitter Tubes. Test all tubes that can be handled by Tube Tester I-177 and check the remaining tubes by replacing them one at a time with good tubes of the same type, noting the effect on the transmitter performance.

WARNING: Voltages high enough to cause death on contact are used in transmitters. Before touching any part of a transmitter circuit or attempting to remove a tube from the transmitter or its power supply, *turn off all power.* Discharge capacitors and ground exposed circuit components with a tool having a well-insulated handle. Remove shorts and grounds after a repair has been made or a tube replaced, before applying power to the transmitter.

SECTION III

FUNCTIONING OF PARTS

12. GENERAL. Individual circuits of Tube Tester I-177 are presented and described below as they function for the various types of tests made with this instrument. The circuit diagrams in this section are included primarily for a better understanding of this equipment, and therefore have been simplified in some instances. These diagrams must not be used for unauthorized repairs.

13. LINE TEST (fig. 2). Pushing the LINE TEST button connects the meter of the tube tester in series with the type 83 rectifier across a secondary winding of the power transformer, with suitable series and shunt resistors 75 and 74 in this calibrating circuit so the meter will receive a d-c voltage proportional to the a-c voltage across the transformer primary. Factory calibration is such that, when 200-ohm LINE ADJUSTMENT rheostat 47 in series with the power transformer primary is adjusted so the meter pointer is exactly at 1500 (near the center of the scale), the a-c input voltage of the transformer is exactly 93 volts, the value at which the instrument was designed to operate. A small automobile-type lamp 20 is included in the transformer primary circuit as the FUSE LAMP to protect the entire instrument from dangerous overloads. It will burn out during an overload. Setting the FIL. switch to the rated filament voltage value of a tube, followed by the setting of the LINE ADJUSTMENT

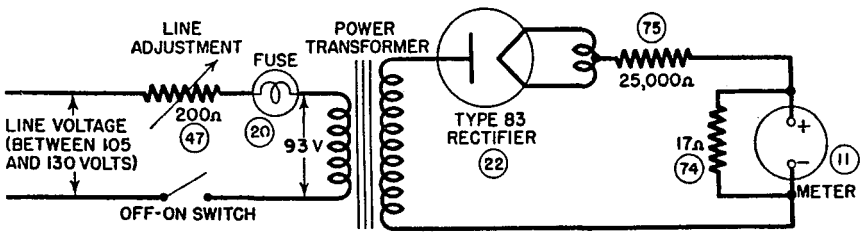

Figure 2. Tube Tester I-177, simplified line test circuit.

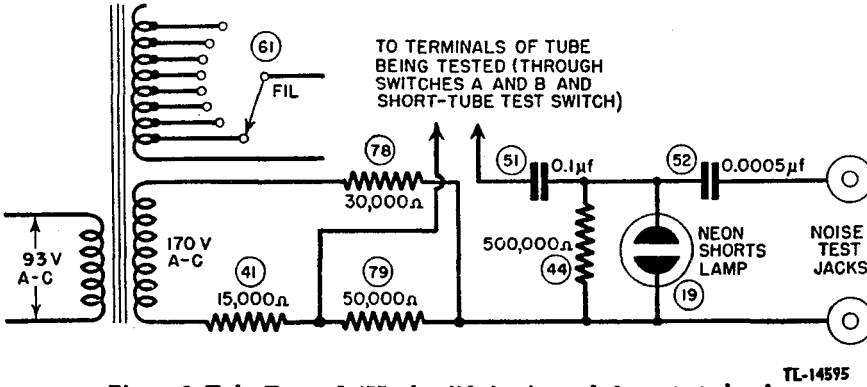

Figure 3. Tube Tester I-177, simplified noise and shorts test circuit.

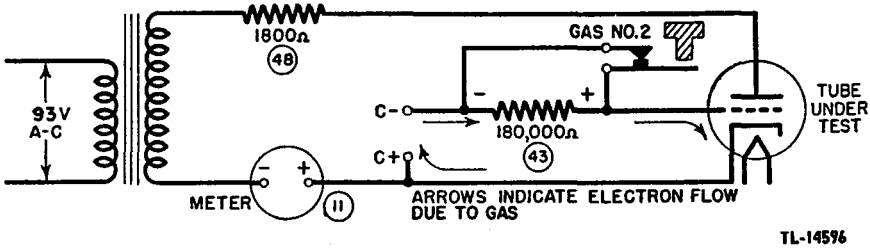

Figure 4. Tube Tester I-177, gas test circuit.

control, provides the correct filament voltage. For filament voltages of 12.6 volts and less, the switch places a center-tapped resistor in the filament circuit for use as a cathode return terminal.

14. SHORT TEST (fig. 3). Turning the SHORT-TUBE TEST switch through positions 1, 2, 3, 4, and 5 connects various pairs of tube electrodes in turn across the test terminals of the circuit. Tubes having shorts between elements complete the circuit and apply transformer voltage to neon SHORTS lamp 19, causing it to glow. Good tubes do not complete the circuit, and the lamp does not glow. Switches A and B (not shown) provide the proper tube socket connections for the tube under test, and the FIL. switch connects the tube filament to the correct tap on the filament winding.

15. NOISE TEST (fig. 3). This circuit is also used for making a noise test of vacuum tubes. With the antenna and ground terminals of a radio receiver connected to the NOISE TEST jacks, any intermittent short between tube electrodes momentarily permits alternating voltage from the power transformer to be applied to the neon lamp, causing a brief oscillation that will be reproduced as an audible signal in the receiver speaker.

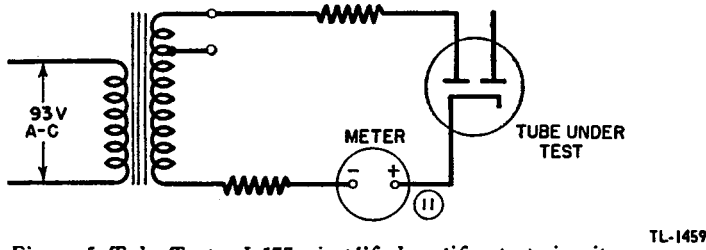

Figure 5. Tube Tester I-177, simplified rectifier test circuit.

16. GAS TEST (fig. 4). Pressing GAS NO. 1 button applies definite values of plate and grid voltages to the tube under test, causing a definite value of plate current to flow. Pressing GAS NO. 2 button inserts 180,000-ohm resistor 43 in the grid circuit. If the grid bias voltage source is sending current through the grid circuit due to gas in the tube, this current develops a voltage drop across resistor 43 that reduces the negative bias, causing a corresponding increase in the plate current being measured by the meter. A tube with negligible gas gives less than a scale division of plate current increase when GAS NO. 2 button is depressed.

17. RECTIFIER TEST (fig. 5). This circuit is used for making emission tests of standard full-wave rectifiers, diodes and 0Z4 tubes. An a-c voltage of definite value is applied between a cathode and plate of the tube under test, through resistors and the meter. The total resistance and the voltage are set automatically to the correct values for a GOOD-REPLACE meter reading when selector switches A and B are set at the positions specified on the test data card for the tube being tested. As an example, one plate of a four-prong full-wave rectifier is connected into the circuit when selector A is set at position 1. The second plate is connected into the circuit when selector A is set at 3. The special pushbutton for 0Z4 rectifier tubes provides a higher plate-cathode voltage than is used for heater or filament-type rectifiers, with a resistor in the circuit to limit the current if the tube elements are shorted. The special pushbutton for diodes provides a lower voltage than for regular tubes. It also provides a protective series resistance.

18. QUALITY TEST FOR AMPLIFIER TUBES (fig. 6).

a. The mutual conductance (g_m) of an amplifier-type vacuum tube, also called the grid-plate transconductance, is an expression representing the efficiency of performance of a tube as indicated by the *change in plate current* (ΔI_p) divided by the *change in grid voltage* (ΔE_g). The relation is generally written $g_m = \Delta I_p / \Delta E_g$. The value is expressed in micromhos

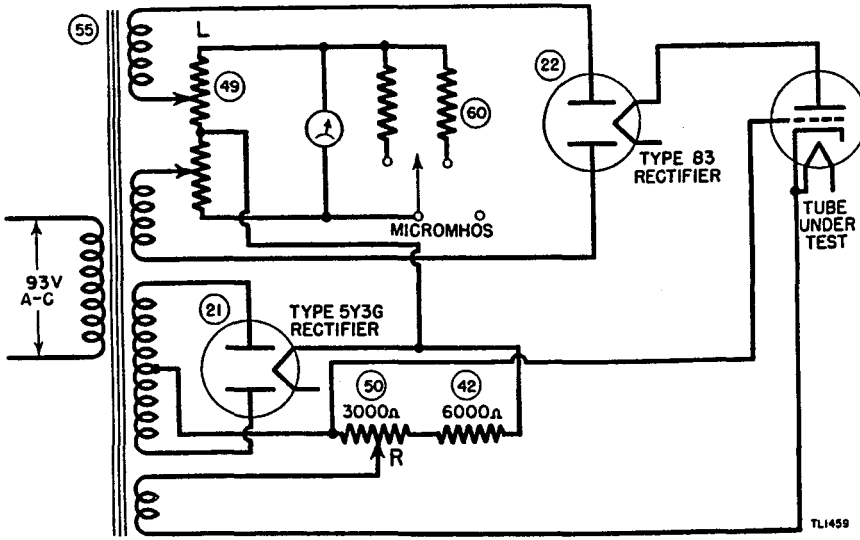

Figure 6. Tube Tester I-177, simplified quality test circuit.

and is a performance indication because it shows how effective a tube is in converting a small change in grid voltage (grid signal) to a large change in plate current. The mutual conductance values given on the test data cards are those supplied by tube manufacturers, and can be checked directly with Tube Tester I-177 by setting its controls for mutual conductance measurements. These values also form the basis for the dynamic quality tests during which the controls are adjusted so that the meter automatically reads GOOD if the mutual conductance is satisfactorily near the rated value for a particular tube.

b. For the RED-GREEN quality test based upon dynamic mutual conductance or for measurement of the mutual conductance value directly, the proper d-c grid voltage for the tube under test is supplied by a full-wave rectifier circuit using a 5Y3G tube. Setting potentiometer R at the value called for on the test data card adjusts this negative bias voltage to the correct value for the particular tube under test.

c. An alternating voltage of 4.7 volts rms, obtained from a separate secondary winding on the power transformer, acts in series with the grid bias as required for this type of test. This voltage alternately swings the grid in positive and negative directions from the d-c bias value, thereby producing the grid-voltage change (ΔE_g) required for a dynamic test.

d. The plate voltage for the tube under test is supplied by another full-wave rectifier circuit, using a type 83 tube. The return lead contains the meter circuit which serves to measure the plate-current change (ΔI_p). The meter circuit consists essentially of dual potentiometer L shunted across the meter. Adjusting control L on the panel adjusts the effective shunt

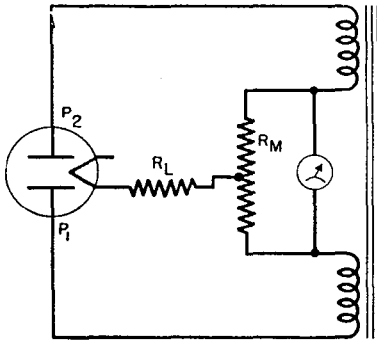

TL-14599

Figure 7. Tube Tester I-177, rectifier diagram illustrating theory.

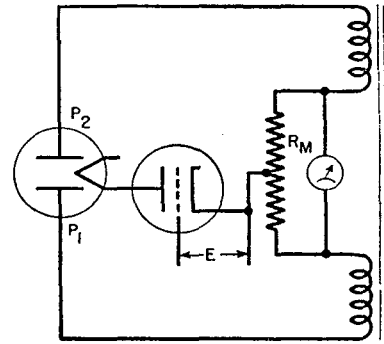

TL14600

TL-14600

Figure 8. Tube Tester I-177, simplified mutual conductance test circuit.

resistance so the meter pointer will read in the GREEN section of the scale if the tube under test is good. Pressing the AMPL. test button completes the circuit as just outlined, and the meter then reads the quality of the tube.

19. THEORY OF OPERATION OF QUALITY TEST CIRCUIT.

a. Examine first the simple full-wave rectifier circuit shown in figure 7. The two power transformer secondary windings have their inner ends connected to a direct-current milliammeter. Across the milliammeter is a center-tapped resistor R_M. The load is shown as a resistance R_L, connected between the center tap and the rectifier filament as in any full-wave rectifier circuit. When rectifier plate P_2 is positive, electron flow is through the upper half of R_M, and the meter tends to deflect in one direction. When P_1 is positive, electron flow is through the lower half of R_M, and the meter tends to deflect in the other direction. With the load resistance fixed and equal forces acting on the meter in both cases, the meter stays at zero because it cannot follow variations at the power line frequency.

b. If the vacuum tube to be tested is substituted for the fixed load resistance, and a fixed bias E is applied to the tube as in figure 8, the meter will still read zero because a vacuum tube under steady-state conditions acts like a fixed resistance.

c. If an a-c potential is applied to the grid of the tube under test in addition to the d-c bias, the circuit becomes equivalent to that employed for quality and mutual conductance tests in Tube Tester I-177. When this a-c potential swings the grid positive, the plate current of the tube is increased, and when the plate-cathode resistance is correspondingly lowered, more current flows through R_M and the deflecting force on the meter is greater

than before. When the grid swings negative on the other half-cycle, the resistance of the tube under test is increased and the deflecting force on the meter is less. With unbalanced currents on adjacent half-cycles and consequent unequal forces on the meter, the meter reading becomes proportional to the difference in currents. Since this difference is created by the a-c grid potential, the meter indicates the plate-current changes produced by the applied grid voltage change, or in other words, the meter indicates mutual conductance.

20. MUTUAL CONDUCTANCE MEASUREMENTS. For mutual conductance measurements, the MICROMHOS switch places additional fixed shunt resistors across the meter as required for the three ranges.

31. TUBE TEST DATA.

NOTE: A Star (★) appearing in Notations Column indicates that the PLATE CAP of the tube should be connected to the UPPER LEFT CONTACT of the 6-pin socket. A 12-inch lead with clip and banana plug is provided for that purpose.

Tube Type	*Socket Letter*	*Select. A*	*Select. B*	*Fil. Volts*	*Potent. L*	*Potent. R*	*Mut. Cond.*	*Press*	*Notations*
00A	A	2	10	5	23	27	666	Ampl.	
0A4G	E	10	2	†	15	0	....	Diode	†Tube strikes at 50V.
01A	A	2	10	5	26	39	725	Ampl.	
0Z4	E	4	8	...	...	...	....	Check for Shorts	
0Z4	E	2	9	...	60	0	....	0Z4 Button	
0Z4	E	10	2	...	60	0	....	0Z4 Button	
1A3	H	10	5	1.5	0	0	....	Diode Also Press 117N7 But.	
1A4	A	2	5	1	27	24	750	Ampl.	
1A5G	E	8	5	1.5	32	35	800	Ampl.	
1A6	C	1	5	2	0	29	500	Ampl. Section	
1A6	C	9	7	2	60	29	150	Ampl. Osc. Sec. OK over 120	
1A7G	E	7	7	1.5	32	20	800	Ampl. Pent. Section	
1A7G	E	12	7	1.5	60	38	300	Ampl. Osc. Sec. OK over 240	
1B4	A	2	5	2	18	29	640	Ampl.	
1B5	C	7	8	2	60	23	475	Ampl. Sec. OK over 380	
1B5	C	10	8	2	0	0	....	Diode But.	
1B5	C	12	3	2	0	0	....	Diode But.	
1B7G	E	7	7	1.5	32	20	800	Ampl. Pent. Section	
1B7G	E	12	7	1.5	60	38	300	Ampl. Osc. Sec. OK over 240	
1C5G	E	8	5	1.5	55	36	1550	Ampl.	
1C6	C	1	5	2	20	24	560	Ampl. Section	
1C6	C	9	7	2	60	41	300	Ampl. Osc. Sec. OK over 240	
1C7G	E	2	5	2	20	24	650	Ampl. Section	
1C7G	E	12	7	2	60	41	300	Ampl. Osc. Sec. OK over 240	
1D5G	E	2	5	2	27	24	750	Ampl.	
1D7G	E	2	5	2	0	29	500	Ampl. Section	
1D7G	E	12	7	2	60	35	200	Ampl. Osc. Sec. OK over 160	
1D8GT	E	8	5	1.5	35	41	925	Ampl. Pent. Section	
1D8GT	E	11	5	1.5	11	9	575	Ampl. Triode Section	
1D8GT	E	5	1	1.5	0	0	....	Diode Section	
1E4G	E	7	5	1.5	32	30	825	Ampl.	
1E5G	E	2	5	2	18	29	640	Ampl.	
1E7G	E	8	8	2	45	17	1150	Ampl. No. 1 Plate	
1E7G	E	11	6	2	45	17	1150	Ampl. No. 2 Plate	
1F4	B	1	5	2	51	19	1400	Ampl.	
1F5G	E	8	5	2	51	19	1400	Ampl.	
1F6	C	1	7	2	20	21	650	Ampl. Section	
1F6	C	11	1	2	0	0	....	Diode But. OK over 500	
1F6	C	5	5	2	0	0	....	Diode But. OK over 500	

Tube Type	Socket Letter	Select. A	Select. B	Fil. Volts	Potent. L	Potent. R	Mut. Cond.	Press	Notations
1F7G	E	1	5	2	20	21	650	Ampl.	Pentode Sec.
1F7G	E	4	5	2	0	0	....	Diode	Button
1F7G	E	7	1	2	0	0	....	Diode	Button
1G4G	E	7	5	1.5	33	40	825	Ampl.	
1G5G	E	8	5	2	54	30	1500	Ampl.	
1G6G	E	2	9	1.5	22	13	675	Ampl.	No. 1 Plate
1G6G	E	12	5	1.5	22	13	675	Ampl.	No. 2 Plate
1H4G	E	7	5	2	36	33	900	Ampl.	
1H5G	E	8	5	1.5	60	13	275	Ampl.	OK over 220
1H5G	E	8	1	1.5	0	0	....	Diode	Button
1H6G	E	7	8	2	60	23	475	Ampl.	Section
1H6G	E	10	8	2	0	0	....	Diode	Button
1H6G	E	11	3	2	0	0	....	Diode	Button
1J5G	E	8	5	2	37	37	950	Ampl.	
1J6G	E	8	8	2	42	12	1000	Ampl.	No. 1 Plate
1J6G	E	11	6	2	42	12	1000	Ampl.	No. 2 Plate
1L4	H	1	7	1.5	43	16	1025	Ampl.	Short on 4-5
1LA4	F	6	2	1.5	32	35	800	Ampl.	
1LA6	F	6	3	1.5	32	20	800	Ampl.	Pent. Section
1LA6	F	2	8	1.5	60	38	300	Ampl.	Osc. Sec. OK over 240
1LB4	F	6	2	1.5	38	42	925	Ampl.	
1LC5	F	6	2	1.5	30	24	775	Ampl.	Short on 4-5
1LC6	F	6	3	1.5	41	19	1000	Ampl.	Pent. Sect.
1LC6	F	2	8	1.5	10	19	550	Ampl.	Osc. Sect.
1LD5	F	6	2	1.5	14	23	600	Ampl.	Pent. Sec.
1LD5	F	4	9	1.5	0	0	....	Diode	
1LE3	F	6	2	1.5	50	0	1300	Ampl.	
1LH4	F	6	3	1.5	60	13	275	Ampl.	Sec. OK over 220
1LH4	F	10	10	1.5	0	0	....	Diode	Section
1LN5	F	6	2	1.5	28	9	750	Ampl.	Short on 4-5
1N5G	E	8	5	1.5	28	9	750	Ampl.	
1N6G	E	8	5	1.5	31	35	800	Ampl.	
1P5G	E	8	5	1.5	31	9	800	Ampl.	
1Q5G	E	8	5	1.5	61	30	2100	Ampl.	
1R4	F	10	5	1.5	0	0	....	Diode	
1R5	H	7	7	1.5	19	29	650	Ampl.	No. 1 Grid, Short on 4-5
1R5	H	1	7	1.5	0	29	500	Ampl.	No. 2 Grid
1S4	H	4	6	1.5	34	82	850	Diode	Button, Short on 3-4-5
1S5	H	6	6	1.5	9	28	525	Ampl.	Pent. Section
1S5	H	3	6	1.5	0	0	....	Diode	
1SA6GT	E	3	4	1.5	39	19	950	Ampl.	
1SB6GT	E	2	5	1.5	20	22	650	Ampl.	
1T4	H	1	7	1.5	28	28	750	Ampl.	Short on 4-5
1T5GT	E	8	5	1.5	46	37	1150	Ampl.	
1V	A	1	5	6.3	40	0	....	Rect.	St.
2A3	A	2	10	2.5	67	55	3000	Ampl.	
2A4G	E	7	5	2.5	76	*	....	Press Rect.	Std. But. Tube strikes at about 60
2A5	C	8	5	2.5	60	24	2000	Ampl.	

Tube Type	Socket Letter	Select. A	Select. B	Fil. Volts	Potent. L	Potent. R	Mut. Cond.	Press	Notations
2A6	C	7	6	2.5	28	9	750		Ampl. Section
2A6	C	10	6	2.5	0	0	....		Diode Button
2A6	C	10	3	2.5	0	0	....		Diode Button
2A7	D	7	6	2.5	41	18	1000		Ampl. Section
2A7	D	10	6	2.5	60	25	400		Ampl. Osc. OK over 320
2B6	D	3	2	2.5	15	30	600		Ampl. Input Section
2B6	D	7	6	2.5	64	12	2500		Ampl. Output Sec. Short on 3
2B7	D	7	6	2.5	41	25	1000		Ample. Pentode Section
2B7	D	10	6	2.5	0	0	....		Diode Button
2B7	D	10	3	2.5	0	0	....		Diode Button
2C21	D	10	3	6.3	51	14	1375		Ampl. Plate No. 1
2C21	D	3	3	6.3	51	14	1375		Ampl. Plate No. 2
2C22	E	7	2	6.3	67	11	3000		Ampl. NOTE A
2V3G	E	7	1	2.5	0	0	....		Rect. Std. OK over 1000
2W3	E	4	11	2.5	33	0	....		Rect. Std. Button
2X2	A	7	1	2.5	0	0	....		Rect. Std. OK over 1000 ★
2Z2	A	2	7	2.5	35	0	....		Rect. Std. Button
3A4	H	11	2	1.1	0	0	....		Diode Short on 3-4-5
3A5	H	8	8	3	60	12	2000		Ampl. Plt. No. 1 Short on 4-5
3A5	H	6	2	3	60	18	2000		Ampl. Plt. No. 2 Short on 4-5
3A8GT	E	8	5	2.5	28	10	750		Ampl. Pent. Sec. Short on 1
3A8GT	E	11	5	2.5	0	10	500		Ampl. Triode Section
3A8GT	E	5	1	2.5	0	0	....		Diode Section
3B5GT	E	8	5	2.5	54	49	1500		Ampl. Short on 4-5
3D6	F	6	2	1.5	61	30	2100		Ampl. Short on 1
3Q4	H	4	6	1.5	34	82	850		Press Diode But Short on 3-4-5
3Q5GT	E	8	5	3	58	31	1800		Ampl. Short on 4-5
3S4	H	4	6	2.5	28	82	750		Press Diode But Short on 3-4-5
4A6G	E	2	9	3	41	0	1000		Ampl. No. 1 Plate
4A6G	E	12	5	3	41	13	1000		Ampl. No. 2 Plate
5R4GY	E	4	11	5	40	0	....		Rect. Std. Plt. No. 1
5R4GY	E	5	11	5	40	0	....		Rect. Std. Plt. No. 2
5T4	E	4	11	5	40	0	....		Rect. Std.
5T4	E	5	11	5	40	0	....		Rect. Std.
5U4G	E	4	11	5	40	0	....		Rect. Std.
5U4G	E	5	11	5	40	0	....		Rect. Std.
5V4G	E	4	11	5	40	0	....		Rect. Std.
5V4G	E	5	11	5	40	0	....		Rect. Std.
5W4	E	4	11	5	33	0	....		Rect. Std.
5W4	E	5	11	5	33	0	....		Rect. Std.
5X4G	E	7	9	5	40	0	....		Rect. Std.
5X4G	E	12	4	5	40	0	....		Rect. Std.
5Y3	E	4	11	5	40	0	....		Rect. Std.
5Y3	E	5	11	5	40	0	....		Rect. Std.
5Y4G	E	7	9	5	35	0	....		Rect. Std.
5Y4G	E	12	4	5	35	0	....		Rect. Std.
5Z3	A	2	7	5	40	0	....		Rect. Std.
5Z3	A	3	7	5	40	0	....		Rect. Std.

Tube Type	Socket Letter	Select. A	Select. B	Fil. Volts	Potent. L	Potent. R	Mut. Cond.	Press	Notations
5Z4	E	4	11	5	40	0	....	Rect. Std.	
5Z4	E	5	11	5	40	0	....	Rect. Std.	
6A3	A	2	10	6.3	67	55	3000	Ampl.	
6A4	B	1	5	6.3	60	23	2000	Ampl.	
6A5G	E	7	5	6.3	67	55	3000	Ampl.	
6A6	D	1	5	6.3	53	10	1500	Ampl. No. 1 Plate	
6A6	D	12	5	6.3	53	10	1500	Ampl. No. 2 Plate	
6A7	D	7	6	6.3	41	18	1000	Ampl. Pent. Section	
6A7	D	10	6	6.3	60	25	400	Ampl. Osc. Sec. OK over 320	
6A8	E	7	7	6.3	41	18	1000	Ampl. Pent. Section	
6A8	E	12	7	6.3	60	30	300	Ampl. Osc. Sec. OK over 240	
6AB6G	E	8	5	6.3	53	0	1450	Ampl.	
6AB7	E	4	2	6.3	69	0	3500	Ampl.	
6AC5G	E	8	5	6.3	40	0	1000	Ampl.	
6AC6G	E	8	5	6.3	63	0	2400	Ampl.	
6AC7	E	4	2	6.3	71	0	3500	Ampl.	
6AD7G	E	8	5	6.3	60	24	2000	Ampl. Pent. Sect.	
6AD7G	E	5	5	6.3	60	65	325	Diode Triode Sec. OK over 260	
6AE5G	E	7	5	6.3	47	56	1200	Ampl.	
6AE6G	E	7	5	6.3	34	0	850	Ampl. No. 1 Plate	
6AE6G	E	10	5	6.3	28	0	750	Ampl. No. 2 Plate	
6AE7GT	E	1	8	6.3	54	27	1500	Ampl. No. 1 Cathode	
6AE7GT	E	8	8	6.3	54	27	1500	Ampl. No. 2 Cathode	
6AF5G	E	8	5	6.3	53	42	1500	Ampl.	
6AG7	E	4	2	6.3	72	15	5000	Ampl.	
6AH7GT	E	7	9	6.3	60	35	2000	Press Gas No. 1 Short on 2-3	
6AH7GT	E	11	9	6.3	60	35	2000	Press Gas No. 1 Short on 3-4-5	
6AK5	K	1	9	6.3	71	0	4500	Ampl. Short on 4-5	
6AL6G	E	8	5	6.3	73	19	5000	Ampl. Connect Cap to Plate Contact of 5 Pin Socket	
6B4G	E	7	5	6.3	67	55	3000	Ampl.	
6B5	C	8	5	6.3	52	0	1500	Ampl.	
6B6	E	7	5	6.3	28	9	750	Ampl. Section	
6B6	E	10	5	6.3	0	0	....	Diode Button	
6B6	E	10	2	6.3	0	0	....	Diode Button	
6B7	D	7	6	6.3	41	25	1000	Ampl. Pent. Section	
6B7	D	10	6	6.3	0	0	....	Diode Button	
6B7	D	10	3	6.3	0	0	....	Diode Button	
6B8	E	7	5	6.3	42	25	1000	Ampl. Pent. Section	
6B8	E	10	5	6.3	0	0	....	Diode Button	
6B8	E	10	2	6.3	0	0	....	Diode Button	
6C4	L	2	9	6.3	67	20	3000	Ampl.	
6C5	E	7	5	6.3	60	17	2000	Ampl.	
6C6	C	1	7	6.3	49	17	1225	Ampl.	
6C7	D	7	6	6.3	49	24	1250	Ampl. Section	
6C7	D	10	6	6.3	0	0	....	Diode Button	
6C7	D	10	3	6.3	0	0	....	Diode Button	

Tube Type	Socket Letter	Select. A	Select. B	Fil. Volts	Potent. L	Potent. R	Mut. Cond.	Press	Notations
6C8G	E	8	7	6.3	42	14	1000		Ampl. No. 1 Plate
6C8G	E	11	7	6.3	42	14	1000		Ampl. No. 2 Plate
6D5	E	7	5	6.3	60	47	2000		Ampl.
6D6	C	1	7	6.3	56	17	1600		Ampl.
6D7	D	7	6	6.3	48	20	1225		Ampl.
6D8G	E	7	7	6.3	41	22	1000		Ampl. Pentode Section
6D8G	E	12	7	6.3	60	20	300		Ampl. Osc. Sec. OK over 240
6E6	D	1	5	6.3	52	23	1400		Ampl. No. 1 Plate
6E6	D	12	5	6.3	52	23	1400		Ampl. No. 2 Plate
6E7	D	7	6	6.3	55	20	1500		Ampl.
6F5	E	10	5	6.3	43	10	1000		Ampl.
6F6	E	8	5	6.3	60	24	2000		Ampl.
6F7	D	7	6	6.3	45	23	1100		Ampl. Pent. Section
6F7	D	10	6	6.3	60	23	450		Ampl. Tri. Sec. OK over 360
6F8G	E	8	7	6.3	60	13	2000		Ampl. No. 1 Plate
6F8G	E	11	7	6.3	60	13	2000		Ampl. No. 2 Plate
6G6G	E	8	5	6.3	61	19	2100		Ampl.
6H4GT	E	4	8	6.3	50	0	....		Diode Section
6H6	E	7	2	6.3	50	0	....		Diode Button
6H6	E	7	5	6.3	50	0	....		Diode Button
6J5G	E	7	5	6.3	60	24	2000		Ampl.
6J6	K	1	2	6.3	72	0	5000		Ampl. Plt. No. 1
6J6	K	11	8	6.3	72	0	5000		Ampl. Plt. .No. 2
6J7	E	1	9	6.3	48	18	1225		Ampl.
6J8G	E	8	5	6.3	41	15	1000		Ampl. Heptode Section
6J8G	E	11	5	6.3	0	25	500		Ampl. Triode Section
6K5G	E	7	5	6.3	40	17	1000		Ampl.
6K6G	E	8	5	6.3	55	28	1600		Ampl.
6K7	E	8	5	6.3	54	16	1450		Ampl.
6K8	E	8	5	6.3	41	9	1000		Ampl. Hexode Section
6K8	E	11	5	6.3	63	9	2400		Ampl. Triode Section
6L5G	E	7	5	6.3	56	22	1500		Ampl.
6L6	E	8	5	6.3	73	19	5000		Ampl.
6L7	E	1	9	6.3	20	19	650		Ampl. Cap Grid
6L7	E	8	5	6.3	20	22	650		Ampl. Pin Grid
6N6MG	E	8	5	6.3	52	0	1500		Ampl.
6N7	E	2	9	6.3	53	10	1500		Ampl. No. 1 Plate
6N7	E	12	5	6.3	53	10	1500		Ampl. No. 2 Plate
6P5G	E	7	5	6.3	53	24	1450		Ampl.
6P7	E	3	12	6.3	45	23	1100		Ampl. Pent. Section
6P7	E	6	12	6.3	60	23	450		Ampl. Tri. Sec. OK over 360
6Q6G	E	7	5	6.3	40	14	1000		Ampl. Section
6Q6G	E	7	2	6.3	0	0	....		Diode Button
6Q7	E	7	5	6.3	33	14	800		Ampl. Section
6Q7	E	10	5	6.3	0	0	....		Diode Button
6Q7	E	10	2	6.3	0	0	....		Diode Button

Tube Type	Socket Letter	Select. A	Select. B	Fil. Volts	Potent. L	Potent. R	Mut. Cond.	Press	Notations
6R7	E	7	5	6.3	60	17	1900	Ampl.	Section
6R7	E	10	5	6.3	0	0	....	Diode	Button
6R7	E	10	2	6.3	0	0	....	Diode	Button
6S7G	E	8	5	6.3	57	22	1750	Ampl.	
6SA7	E	1	7	6.3	28	17	750	Ampl.	Section
6SA7	E	7	7	6.3	28	17	750	Ampl.	Osc. Section
6SC7	G	10	3	6.3	42	0	1000	Ampl.	
6SC7	G	1	3	6.3	42	0	1000	Ampl.	
6SD7GT	E	4	2	6.3	64	13	2500	Ampl.	
6SF5	E	7	4	6.3	56	13	1600	Ampl.	
6SF7	E	6	7	6.3	60	0	2000	Ampl.	
6SF7	E	8	1	6.3	0	0	....	Diode	
6SG7	E	4	2	6.3	68	10	3300	Ampl.	
6SH7	E	4	2	6.3	69	0	3400	Ampl.	
6SJ7	E	4	2	6.3	56	18	1575	Ampl.	
6SK7	E	4	2	6.3	59	18	1900	Ampl.	
6SL7	G	4	1	6.3	36	0	900	Ampl.	
6SL7	G	10	4	6.3	53	0	1400	Ampl.	Short on 2-3
6SN7	G	4	1	6.3	56	24	1650	Ampl.	Plt. No. 1
6SN7	G	10	4	6.3	56	24	1650	Ampl.	Plt. No. 2 Short on 2-3
6SQ7	G	6	6	6.3	42	0	1000	Ampl.	Triode Sec.
6SQ7	G	3	7	6.3	0	0	....	Diode	Diode No. 1
6SQ7	G	7	1	6.3	0	0	....	Diode	Diode No. 2
6SR7	G	6	6	6.3	59	15	1900	Ampl.	Triode Sect.
6SR7	G	3	7	6.3	0	0	....	Diode	Diode No. 1
6SR7	G	7	1	6.3	0	0	....	Diode	Diode No. 2
6SS7	E	4	2	6.3	58	16	1850	Ampl.	
6ST7	G	6	7	6.3	59	12	1900	Ampl.	Triode Section
6ST7	G	3	7	6.3	0	0	....	Diode	Diode No. 1
6ST7	G	7	1	6.3	0	0	....	Diode	Diode No. 2
6T7G	E	7	5	6.3	40	14	1000	Ampl.	Triode Section
6T7G	E	10	5	6.3	0	0	....	Diode	Button
6T7G	E	10	2	6.3	0	0	....	Diode	Button
6U6GT	E	8	5	6.3	73	27	6200	Ampl.	
6U7G	E	8	5	6.3	56	17	1600	Ampl.	
6V6G	E	8	5	6.3	67	25	3000	Ampl.	
6V7G	E	7	5	6.3	40	32	975	Ampl.	Section
6V7G	E	10	5	6.3	0	0	....	Diode	Button
6V7G	E	10	2	6.3	0	0	....	Diode	Button
6W5	E	2	9	6.3	40	0	....	Rect.	Std.
6W5	E	10	2	6.3	40	0	....	Rect.	Std.
6W6GT	E	8	5	6.3	67	46	3000	Ampl.	
6W7G	E	1	9	6.3	41	20	1000	Ampl.	
6X5	E	2	9	6.3	40	0	....	Rect.	Std.
6X5	E	10	2	6.3	40	0	....	Rect.	Std.
6Y5	C	9	8	6.3	40	0	....	Rect.	Std.
6Y5	C	12	8	6.3	40	0	....	Rect.	Std.
6Y6G	E	8	5	6.3	74	36	7000	Ampl.	
6Y7G	E	2	9	6.3	39	12	1000	Ampl.	No. 1 Plate
6Y7G	E	12	5	6.3	39	12	1000	Ampl.	No. 2 Plate

Tube Type	Socket Letter	Select. A	Select. B	Fil. Volts	Potent. L	Potent. R	Mut. Cond.	Press	Notations
6Z3	A	1	5	6.3	40	0	....	Rect. Std.	
6Z4-84	B	7	7	6.3	40	0	....	Rect. Std.	
6Z4-80	B	5	1	6.3	40	0	....	Rect. Std.	
6Z5	C	9	12	6.3	40	0	....	Rect. Std.	
6Z5	C	12	12	6.3	40	0	....	Rect. Std.	
6Z7G	E	2	9	6.3	45	0	1200	Ampl. No. 1 Plate	
6Z7G	E	12	5	6.3	45	0	1200	Ampl. No. 2 Plate	
6ZY5G	E	7	2	6.3	40	0	....	Rect. Std.	
6ZY5G	E	7	5	6.3	40	0	....	Rect. Std.	
7A4	F	6	2	6.3	66	14	2600	Ampl.	
7A5	F	6	2	6.3	71	23	6000	Ampl.	
7A6	F	8	5	6.3	40	0	....	Diode Short 1-4-5	
7A6	F	11	5	6.3	40	0	....	Diode	
7A7	F	6	2	6.3	58	22	1750	Ampl.	
7A8	F	5	3	6.3	41	20	1000	Ampl. Section	
7A8	F	8	10	6.3	0	21	500	Ampl. Osc. Section	
7B4	F	6	2	6.3	43	10	1000	Ampl.	
7B5	F	6	2	6.3	56	28	1600	Ampl.	
7B6	F	2	3	6.3	28	9	750	Ampl. Sec. Short 1-4-5	
7B6	F	8	3	6.3	0	0	....	Diode	
7B6	F	6	10	6.3	0	0	....	Diode	
7B7	F	5	4	6.3	57	22	1700	Ampl.	
7B8	F	5	3	6.3	40	22	1000	Ampl. Pentode Section	
7B8	F	8	10	6.3	0	15	500	Ampl. Osc. Section	
7C4	F	9	5	6.3	25	0	....	Diode	
7C5	F	6	2	6.3	67	25	3000	Ampl.	
7C6	F	2	3	6.3	15	8	600	Ampl. Sec. Short 1-4-5	
7C6	F	8	3	6.3	0	0	....	Diode	
7C6	F	6	10	6.3	0	0	....	Diode	
7C7	F	6	2	6.3	49	18	1300	Ampl. Section	
7E5	N	12	4	6.3	67	0	3000	Ampl. Short on 1-2-5	
7E6	F	2	3	6.3	59	15	1900	Ampl. Sec. Short 1-4-5	
7E6	F	8	3	6.3	0	0	....	Diode	
7E6	F	12	10	6.3	0	0	....	Diode	
7E7	F	6	3	6.3	49	18	1300	Ampl. Pent. Section	
7E7	F	1	8	6.3	0	0	....	Diode	
7E7	F	4	8	6.3	0	0	....	Diode	
7F7	F	2	9	6.3	56	0	1600	Ampl. No. 1 Plate Short on 1	
7F7	F	12	5	6.3	56	0	1600	Ampl. No. 2 Plate	
7H7	F	6	2	6.3	67	0	3000	Ampl.	
7J7	F	6	3	6.3	31	15	800	Ampl. Hexode Section	
7J7	F	2	8	6.3	42	15	1000	Ampl. Triode Section	
7K7	F	2	8	6.3	41	0	1000	Ampl. Triode Short on 1-4-5	
7K7	F	9	2	6.3	0	0	....	Diode Diode No. 1	
7K7	F	5	9	6.3	0	0	....	Diode Diode No. 2	
7L7	F	6	2	6.3	60	10	2000	Ampl.	
7N7	F	2	9	6.3	60	13	2000	Ampl. Plate No. 1 Short on 1-4-5	
7N7	F	12	5	6.3	60	13	2000	Ampl. Plate No. 2	

Tube Type	Socket Letter	Select. A	Select. B	Fil. Volts	Potent. L	Potent. R	Mut. Cond.	Press	Notations
7Q7	F	6	2	6.3	33	17	800	Ampl.	
7R7	F	6	3	6.3	67	8	3000	Ampl.	Pentode Section
7R7	F	1	8	6.3	0	0	....	Diode	Diode No. 1
7R7	F	4	8	6.3	0	0	....	Diode	Diode No. 2
7S7	F	6	3	6.3	15	53	1500	Ampl.	Hexode
7S7	F	2	8	6.3	0	53	1500	Ampl.	Triode
7V7	F	6	2	6.3	72	5	4400	Ampl.	
7W7	F	6	2	6.3	67	9	3000	Ampl.	Short on 1-4-5
7Y4	F	1	6	6.3	40	0	....	Rect. Std.	
7Y4	F	6	6	6.3	40	0	....	Rect. Std.	
7Z4	F	1	6	6.3	40	0	....	Rect. Std.	
7Z4	F	6	6	6.3	40	0	....	Rect. Std.	
10	A	2	10	7.5	50	32	1250	Ampl.	
10Y	A	2	10	7.5	53	10	1500	Ampl.	(Also 10 special)
12A	A	2	10	5	57	36	1650	Ampl.	
12A5	D	1	12	6.3	...	...	....	Check for Shorts	
12A5	D	2	10	12.6	58	42	1800	Ampl.	
12A6	E	8	5	12.6	67	10	3000	Ampl.	
12A7	D	7	6	12.6	39	39	975	Ampl.	Pent. Section
12A7	D	7	3	12.6	40	0	....	Rect. Std.	
12A8GT	E	7	7	12.6	41	18	1000	Ampl.	Pent. Section
12A8GT	E	12	7	12.6	60	30	300	Ampl.	Osc. Sec. OK over 240
12AH7GT	E	7	9	12.6	60	35	2000	Press Gas No. 1	Short on 2-3
12AH7GT	E	11	9	12.6	60	35	2000	Press Gas No. 1	Short on 3-4-5
12B7	F	6	2	12.6	59	18	1900	Ampl.	
12B8GT	E	7	7	12.6	0	0	....	Test for Shorts	
12B8GT	E	1	7	12.6	58	18	1800	Ampl.	Pent. Section
12B8GT	E	11	1	12.6	60	0	2000	Ampl.	Triode Section
12C8	E	7	5	12.6	45	20	1150	Ampl.	Pent. Section
12C8	E	10	5	12.6	0	0	....	Diode	
12C8	E	10	2	12.6	0	0	....	Diode	
12F5GT	E	10	5	12.6	41	10	1000	Ampl.	
12H6	E	7	2	12.6	50	0	....	Diode	
12H6	E	7	5	12.6	50	0	....	Diode	
12J5GT	E	7	5	12.6	60	24	2000	Ampl.	
12J7GT	E	1	9	12.6	48	18	1225	Ampl.	
12K7GT	E	8	5	12.6	54	20	1450	Ampl.	
12K8	E	8	5	12.6	41	9	1000	Ampl.	Hex. Sec.
12K8	E	11	5	12.6	63	9	2400	Ampl.	Triode Sec.
12Q7GT	E	7	5	12.6	33	14	800	Ampl.	Triode Sec.
12Q7GT	E	10	5	12.6	0	0	....	Diode	
12Q7GT	E	10	2	12.6	0	0	....	Diode	
12SA7	E	1	7	12.6	28	17	750	Ampl.	No. 1 Grid
12SA7	E	7	7	12.6	28	17	750	Ampl.	No. 2 Grid
12SC7	G	10	3	12.6	42	0	1000	Ampl.	
12SC7	G	1	3	12.6	42	0	1000	Ampl.	
12SF5	E	7	4	12.6	56	13	1600	Ampl.	

Tube Type	Socket Letter	Select. A	Select. B	Fil. Volts	Potent. L	Potent. R	Mut. Cond.	Press	Notations
12SF7	G	6	7	12.6	60	0	2000	Ampl.	
12SF7	G	8	1	12.6	0	0	....	Diode	
12SG7	7	4	2	12.6	68	10	3300	Ampl.	
12SH7	E	4	2	12.6	69	0	3400	Ampl.	
12SJ7	E	4	2	12.6	56	18	1575	Ampl.	
12SK7	E	4	2	12.6	59	18	1900	Ampl.	
12SL7	G	4	1	12.6	53	0	1400	Ampl.	Short on 2-3
12SL7	G	10	4	12.6	53	0	1400	Ampl.	Short on 2-3
12SN7	G	4	1	12.6	67	0	3000	Ampl.	Plt. No. 1
12SN7	G	10	4	12.6	67	0	3000	Ampl.	Plt. No. 2 Short on 2-3
12SQ7	G	6	6	12.6	42	0	1125	Ampl.	Triode Sect.
12SQ7	G	3	7	12.6	0	0	....	Diode	Diode No. 1
12SQ7	G	7	1	12.6	0	0	....	Diode	Diode No. 2
12SR7	G	6	6	12.6	59	15	1900	Ampl.	Triode Sect.
12SR7	G	3	7	12.6	0	0	....	Diode	Diode No. 1
12SR7	G	7	1	12.6	0	0	....	Diode	Diode No. 2
12Z3	A	1	5	12.6	40	0	....	Rect. Std.	
12Z5	D	6	1	6.3	40	0	....	Check for Shorts	
12Z5	D	1	8	12.6	40	0	....	Rect. Std.	
12Z5	D	12	8	12.6	40	0	....	Rect. Std.	
14A4	F	6	2	12.6	66	14	2600	Ampl.	
14A7	F	6	2	12.6	59	18	1900	Ampl.	
14B6	F	2	3	12.6	44	0	1100	Ampl.	Triode Sec. Short on 1-4-5
14B6	F	8	3	12.6	0	0	....	Diode	No. 1
14B6	F	12	10	12.6	0	0	....	Diode	No. 2
14B8	F	5	3	12.6	40	22	1000	Ampl.	Pentode Section
14B8	F	8	10	12.6	0	15	500	Ampl.	Osc. Section
14C5	F	6	2	12.6	69	19	3700	Ampl.	
14C7	F	6	2	12.6	63	9	2275	Ampl.	
14E6	F	2	3	12.6	58	10	1800	Ampl.	Triode Sect. Short on 1-4-5
14E6	F	8	3	12.6	0	0	....	Diode	Diode No. 1
14E6	F	6	10	12.6	0	0	....	Diode	Diode No. 2
14E7	F	6	3	12.6	50	20	1300	Ampl.	
14E7	F	1	8	12.6	0	0	....	Diode	
14E7	F	10	10	12.6	0	0	....	Diode	
14F7	F	2	9	12.6	56	0	1600	Ampl.	Plate 1
14F7	F	12	5	12.6	56	0	1600	Ampl.	Plate 2
14H7	F	6	2	12.6	67	0	3000	Ampl.	
14J7	F	6	3	12.6	31	15	800	Ampl.	Hex. Sec.
14J7	F	2	8	12.6	42	15	1000	Ampl.	Triode Sec.
14N7	F	2	9	12.6	60	13	2000	Ampl.	Short on 1-4-5 Plt. 1
14N7	F	12	5	12.6	60	13	2000	Ampl.	Plt. 3
14Q7	F	6	2	12.6	31	14	800	Ampl.	
14R7	F	6	3	12.6	67	8	3000	Ampl.	Pentode Section
14R7	F	1	8	12.6	0	0	....	Diode	Diode No. 1
14R7	F	4	8	12.6	0	0	....	Diode	Diode No. 2
14S7	F	6	3	12.6	53	15	1500	Ampl.	Heptode Section
14S7	F	2	8	12.6	53	0	1500	Ampl.	Triode Section

Tube Type	Socket Letter	Select. A	Select. B	Fil. Volts	Potent. L	Potent. R	Mut. Cond.	Press	Notations
14W7	F	6	2	12.6	67	9	3000	Ampl.	
14Y4	F	1	6	12.6	40	0	....	Rect. Std.	
14Y4	F	6	6	12.6	40	0	....	Rect. Std.	
14Z3	A	1	5	12.6	40	0	....	Rect. Std.	
15	B	7	6	2	16	18	625	Ampl.	
19	C	8	8	2	42	12	1000	Ampl.	
19	C	11	6	2	42	12	1000	Ampl.	
22	A	2	5	3	0	37	500	Ampl.	
24	B	7	6	2.5	42	10	1000	Ampl.	Also 24A
25A6	E	8	5	25	62	35	2300	Ampl.	
25A7	E	11	5	25	40	0	....	Check for Shorts	
25A7	E	11	5	25	40	0	....	Rect. Std.	
25A7	E	8	5	25	58	35	1800	Ampl.	
25AC5	E	7	5	25	52	0	1500	Ampl.	
25B5	C	8	5	25	64	0	2500	Ampl.	
25B6G	E	8	5	25	71	43	4000	Ampl.	
25B8GT	E	1	7	25	60	18	2000	Ampl.	Pentode Section
25B8GT	E	11	1	25	54	8	1500	Ampl.	Triode Section
25C6G	E	8	5	25	74	36	7000	Ampl.	
25D8GT	E	8	5	25	59	15	1900	Ampl.	Pent. Section
25D8GT	E	11	5	25	45	0	1100	Ampl.	Triode Section
25D8GT	E	5	1	25	0	0	....	Diode	
25L6	E	8	5	25	75	15	8000	Ampl.	
25N6G	E	8	5	25	64	0	2500	Ampl.	
25X6	E	7	2	25	40	0	....	Rect. Std.	Plate No. 1
25X6	E	7	5	25	40	0	....	Rect. Std.	Plate No. 2
25Y5	C	7	8	25	40	0	....	Rect. Std.	
25Y5	C	12	8	25	40	0	....	Rect. Std.	
25Z3	A	1	5	25	40	0	....	Rect. Std.	
25Z4	E	7	2	25	35	0	....	Rect. Std.	
25Z5	C	7	8	25	40	0	....	Rect. Std.	
25Z5	C	12	8	25	40	0	....	Rect. Std.	
25Z5MG	E	7	2	25	40	0	. .	Rect. Std.	
25Z5MG	E	7	5	25	40	0	....	Rect. Std.	
25Z6	E	7	2	25	40	0	....	Rect. Std.	
25Z6	E	7	5	25	40	0	....	Rect. Std.	
26	A	2	10	1.5	46	35	1150	Ampl.	
27	B	1	6	2.5	40	34	1000	Ampl.	Also 27S
28D7	F	8	1	25	60	12	2000	Diode	Plt. No. 1
28D7	F	3	6	25	60	12	2000	Ampl.	Plt. No. 2
30	A	2	10	2	36	33	900	Ampl.	
30 special	A	2	10	2	43	30	1025	Ampl.	
31	A	2	10	2	35	53	925	Ampl.	
32	A	2	5	2	19	30	640	Ampl.	
32L7GT	E	11	5	35	0	0	....	Test for Shorts	
32L7GT	E	8	5	35	71	18	4800	Ampl.	
32L7GT	E	11	5	35	40	0	....	Rect. Std.	
33	B	1	5	2	50	29	1450	Ampl.	

Tube Type	Socket Letter	Select. A	Select. B	Fil. Volts	Potent. L	Potent. R	Mut. Cond.	Press	Notations
RK33	D	3	3	6.3	42	28	1000	Ampl.	
RK33	D	9	3	6.3	42	28	1000	Ampl.	
34	A	2	5	2	14	27	600	Ampl.	
35	B	7	6	2.5	42	20	1020	Ampl.	Also 35S
35A5	F	6	2	35	74	27	5900	Ampl.	
35L6GT	E	8	5	35	71	32	5800	Ampl.	
35Z3	F	1	1	35	35	0	....	Rect. Std.	
35Z4GT	E	10	2	35	40	0	....	Rect. Std.	
35Z5GT	E	1	3	BLST	40	0	....	Short Test—Should light on 1-2-3-4-5	
35Z5GT	E	11	1	35	40	0	....	Rect. Std.	
35Z6G	E	7	2	35	40	0	....	Rect. Std.	Plate No. 1
35Z6G	E	7	5	35	40	0	....	Rect. Std.	Plate No. 2
36	B	7	6	6.3	43	20	1050	Ampl.	
37	B	1	6	6.3	36	34	900	Ampl.	
38	B	7	6	6.3	41	32	1050	Ampl.	
39-44	B	7	6	6.3	41	23	1000	Ampl.	
40	A	2	10	5	60	26	200	Ampl.	OK over 160
41	C	8	5	6.3	55	28	1600	Ampl.	
42	C	8	5	6.3	60	24	2000	Ampl.	
43	C	8	5	25	62	35	2300	Ampl.	
45	A	2	10	2.5	59	50	1850	Ampl.	
45Z3	H	10	2	35	35	0	....	Rect. Std.	also Press 117N7
45Z5GT	E	11	1	35	40	0	....	Rect. Std.	
45Z5GT	E	1	3	BLST	40	0	....	Short Test—Should light on 1-2-3-4-5	
46	B	1	5	2.5	60	25	2000	Ampl.	
47	B	1	5	2.5	60	18	2000	Ampl.	
48	C	8	5	25	60	48	2000	Ampl.	
49	B	1	5	2	45	40	1125	Ampl.	
50	A	2	10	7.5	53	50	1500	Ampl.	
50A5	F	6	2	50	74	25	7500	Ampl.	
50C6G	E	8	5	50	74	36	7000	Ampl.	
50L6GT	E	8	5	50	74	25	7500	Ampl.	
50Y6GT	E	7	2	50	40	0	....	Rect. Std.	Plate No. 1
50Y6GT	E	7	5	50	40	0	....	Rect. Std.	Plate No. 2
50Z7G	E	7	6	50	40	0	....	Rect. Std.	Plate No. 1 Short on 4-5
50Z7G	E	10	2	50	40	0	....	Rect. Std.	Plate No. 2
51	B	7	6	2.5	42	20	1020	Ampl.	Also 51S
52	B	1	5	6.3	63	27	2400	Ampl.	
53	D	1	5	2.5	53	10	1500	Ampl.	No. 1 Plate
53	D	12	5	2.5	53	10	1500	Ampl.	No. 2 Plate
55	C	7	6	2.5	40	32	975	Ampl.	
55	C	10	6	2.5	0	0	....	Diode	OK over 500
55	C	10	3	2.5	0	0	....	Diode	OK over 500
56	B	1	6	2.5	53	26	1450	Ampl.	
57	C	2	5	2.5	48	17	1225	Ampl.	Also 57S

Tube Type	Socket Letter	Select. A	Select. B	Fil. Volts	Potent. L	Potent. R	Mut. Cond.	Press	Notations
57A	A	2	5	6.3	48	17	1225	Ampl.	Also 57AS
58	C	2	5	2.5	54	20	1450	Ampl.	Also 58S
58A	C	2	5	6.3	54	20	1450	Ampl.	Also 58AS
59	D	8	8	2.5	60	18	2000	Ampl.	
70A7GT	E	8	5	75	71	17	5800	Ampl.	Short on 1-4-5
70A7GT	E	11	5	75	0	0	....	Diode	OK over 300
70L7GT	E	6	12	75	71	34	....	Check for Shorts	
70L7GT	E	7	7	75	71	34	5000	Ampl.	
70L7GT	E	5	1	75	40	0	....	Rect. Std.	
71A	A	2	10	5	56	60	1650	Ampl.	
75	C	7	6	6.3	28	9	750	Ampl.	Section
75	C	10	6	6.3	0	0	....	Diode	
75	C	10	3	6.3	0	0	....	Diode	
75MG	E	9	5	6.3	28	9	750	Ampl.	Section
75MG	E	12	2	6.3	0	0	....	Diode	
75MG	E	12	5	6.3	0	0	....	Diode	
76	B	1	6	6.3	53	24	1450	Ampl.	
77	C	2	5	6.3	48	17	1225	Ampl.	
78	C	2	5	6.3	54	20	1450	Ampl.	
79	C	2	10	6.3	39	12	1000	Ampl.	No. 1 Plate
79	C	5	10	6.3	39	12	1000	Ampl.	No. 2 Plate
80	A	2	7	5	35	0	....	Rect. Std.	
80	A	3	7	5	35	0	....	Rect. Std.	
81	A	2	7	7.5	33	0	....	Rect. Std.	
82	A	2	7	2.5	40	0	....	Rect. Std.	
82	A	3	7	2.5	40	0	....	Rect. Std.	
82V	A	2	7	2.5	40	0	....	Rect. Std.	
82V	A	2	7	2.5	40	0	....	Rect. Std.	
83	A	2	7	5	40	0	....	Rect. Std.	
83	A	3	7	5	40	0	....	Rect. Std.	
83V	A	2	7	5	40	0	....	Rect. Std.	
83V	A	3	7	5	40	0	....	Rect. Std.	
84-6Z4	B	7	7	6.3	40	0	....	Rect. Std.	
84-6Z4	B	5	1	6.3	40	0	....	Rect. Std.	
85	C	7	6	6.3	40	32	975	Ampl.	Section
85	C	10	6	6.3	0	0	....	Diode	
85	C	10	3	6.3	0	0	....	Diode	
89	C	2	5	6.3	54	30	1550	Ampl.	
99	A	2	10	3	60	45	425	Ampl.	OK over 340
112A	A	2	10	5	57	36	1650	Ampl.	
117L7GT	E	2	8	117	72	30	4000	Ampl.	Short on 1-4-5
117L7GT	E	5	8	117	40	0	....	Rect. Std.	
117M7GT	E	2	8	117	73	28	6000	Ampl.	Short on 1-4-5
117M7GT	E	5	8	117	40	0	....	Rect. Std.	
117N7GT	E	8	10	117	74	25	7000	Ampl.	
117N7GT	E	4	3	117	40	0	....	Rect. Std.	Also Press 117N7 But.

Tube Type	Socket Letter	Select. A	Select. B	Fil. Volts	Potent. L	Potent. R	Mut. Cond.	Press	Notations
117P7GT	E	8	10	117	70	25	4000	Ampl.	
117P7GT	E	4	3	117	40	0	....	Rect. Std.	Also Press 117N7
117Z4GT	E	10	2	117	40	0	....	Rect. Std.	
117Z6G	E	2	7	117	75	0	....	Press Gas No. 1	
117Z6G	E	10	2	117	75	0	....	Press Gas No. 1	Early Tubes Short 1-3 Late Tubes Short 3
717A	E	4	2	6.3	69	0	3500	Ampl.	
801A	A	2	10	7.5	53	0	1500	Ampl.	
802	D	10	3	6.3	60	18	2000	Ampl. ★	
807	B	12	1	6.3	70	27	3800	Ampl. ★	
816	A	7	1	2.5	20	0	....	Rect. Std. ★	
837	D	10	3	12.6	71	0	4000	Ampl. ★	
841	A	2	10	7.5	42	0	1000	Ampl.	
842	A	2	10	7.5	46	50	1150	Ampl.	
843	B	1	6	2.5	56	10	1625	Ampl.	
864	A	2	10	1.5	18	37	650	Ampl.	
865	A	10	4	7.5	16	28	625	Ampl. ★	
866A	A	7	1	2.5	40	0	....	Rect. Std. ★	
871	A	7	1	2.5	20	0	....	Rect. Std. ★	
XXB	F	2	10	2.5	30	30	800	Ampl.	
XXB	F	12	6	2.5	31	60	400	Ampl.	OK over 320
XXD	F	12	5	12.6	64	0	2500	Ampl.	Plt. No. 1 Short on 1-4-
XXD	F	2	9	12.6	64	0	2500	Ampl.	Plt. No. 2
XXFM	F	1	2	6.3	30	0	900	Ampl.	Short 1-4-5
XXFM	F	12	8	6.3	0	0	....	Diode	
XXFM	F	7	3	6.3	0	0	....	Diode	
XXL	F	6	2	6.3	67	0	3000	Ampl.	
879	A	7	1	2.5	0	0	....	Rect. Std.	OK over 1000 ★
884	E	7	5	6.3	40	*	....	Rect. Std.	Strikes at 60 on R
885	B	1	6	2.5	40	*	....	Rect. Std.	Strikes at 60 on R
950	B	1	5	2	37	37	950	Ampl.	
951	A	2	5	2	18	29	640	Ampl.	
954	M	6	7	6.3	44	17	1100	Ampl.	
955	M	9	7	6.3	59	18	1900	Ampl.	
956	M	6	7	6.3	53	14	1500	Ampl.	
957	M	9	7	1.1	19	23	650	Ampl.	Short on 4-5
958	M	9	7	1.1	47	34	1200	Ampl.	Short on 4-5
959	M	6	7	1.1	14	23	600	Ampl.	Short on 4-5
1201	N	12	4	6.3	67	0	3000	Ampl.	Short on 1-2-5
1203	F	9	5	6.3	25	0	....	Diode	
1204	N	3	9	6.3	58	0	1800	Ampl.	Short on 4-5
1231	F	5	4	6.3	71	10	4000	Ampl.	
1232	F	5	4	6.3	60	15	2000	Ampl.	
1284	F	6	2	12.6	60	23	2000	Ampl.	
1291	F	1	6	1.5	0	15	2000	Diode	Short on 4-5 Reads in Green Plt. No. 1
1291	F	6	6	1.5	0	15	2000	Diode	Reads in Green Plt. No.
1293	F	6	2	1.5	50	25	1300	Ampl.	

Tube Type	Socket Letter	Select. A	Select. B	Fil. Volts	Potent. L	Potent. R	Mut. Cond.	Press	Notations
1294	F	10	5	1.5	0	0	....	Diode	
1299	F	6	2	1.5	61	30	2100	Ampl.	Short on 1
1609	B	1	5	1.5	26	18	725	Ampl.	
1612	E	1	9	6.3	20	19	650	Ampl.	Cap Grid
1612	E	8	5	6.3	20	22	650	Ampl.	Pin Grid
1613	E	8	5	6.3	62	0	2250	Ampl.	
1616	A	7	1	2.5	35	0	....	Rect. Std. ★	
1619	E	8	5	2.5	69	10	3400	Ampl.	
1620	E	1	9	6.3	48	18	1225	Ampl.	
1621	E	8	5	6.3	60	24	2000	Ampl.	
1622	E	8	5	6.3	73	19	5000	Ampl.	
1624	B	12	1	2.5	71	14	4000	Ampl. ★	
1625	D	10	3	12.6	70	27	3800	Ampl. ★	
1626	E	8	5	12.6	61	43	2100	Ampl.	
1631	E	8	5	12.6	73	19	5000	Ampl.	
1632	E	8	5	12.6	75	15	8000	Ampl.	
1633	G	4	1	25	75	0	8500	Ampl.	Plt. No. 1
1633	G	10	4	25	69	0	3400	Ampl.	Plt. No. 2 Short on 2-3
1634	G	10	3	12.6	42	0	1000	Ampl.	Plt. No. 1
1634	G	1	3	12.6	42	0	1000	Ampl.	Plt. No. 2
1851	E	8	5	6.3	71	10	4000	Ampl.	
1852	G	4	2	6.3	71	0	3500	Ampl.	
1853	E	4	2	6.3	71	10	3500	Ampl.	
HY113	O	7	5	1.5	0	40	500	Ampl.	
HY115	O	7	5	1.5	60	32	370	Ampl.	OK over 290
HY125	O	7	5	1.5	60	45	450	Ampl.	OK over 360
HY145	O	7	5	1.5	60	32	370	Ampl.	OK over 290
HY155	O	7	5	1.5	60	45	450	Ampl.	OK over 360
2050	E	8	5	6.3	40	*	....	Rect. Std.	Strikes at 32 on R
2051	E	8	5	6.3	40	*	....	Rect. Std.	Strikes at 32 on R
7193	E	7	2	6.3	67	0	3000	Ampl. ★	
9001	K	1	9	6.3	44	17	1100	Ampl.	Short on 4-5
9002	L	2	9	6.3	59	18	1900	Ampl.	Short on 4-5
9003	K	1	9	6.3	54	14	1500	Ampl.	Short on 4-5
9006	L	2	9	6.3	20	0	....	Diode	Short on 4-5
38142	A	2	10	7.5	62	30	2200	Ampl.	

TO TEST MAGIC EYE TUBES: Insert in Socket C. Set proper Filament Voltage. Press "Amp." Button

2E5—6AB5—6E5—6G5—6H5—6N5—6T5—6U5

A	B	
12	3	Eye Open.
12	2	Eye Closed.

6AD6—6AF6

A	B	
2	8	Eye No. 1 Open, No. 2 Closed.
3	8	Eye No. 2 Open, No. 1 Closed.