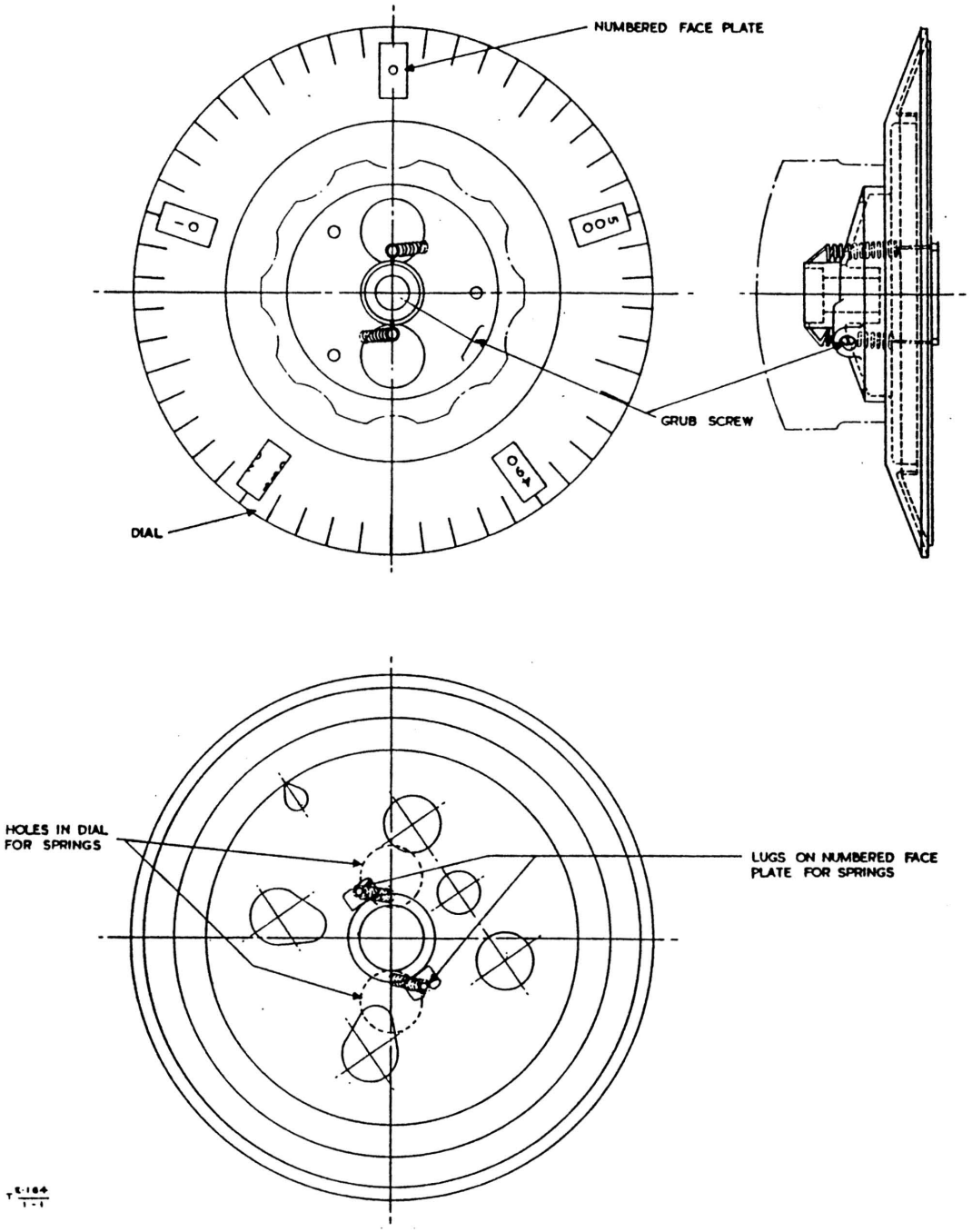

Fig 1 - Slow motion drive

Dismantling the gang capacitor
(Fig 2)

6. The gang must not be dismantled unless absolutely necessary. Each pair of rotors and stators are carefully matched and it is important that each section is marked before dismantling to ensure reassembly in the same order.

7. Remove the gang assembly from the set as in para 2. Remove the gearcase top cover and the drive shaft bush, E. Secure the two halves of the split gear, C, by a piece of copper wire wrapped around the teeth. Remove the drive spindle as detailed in para 4.

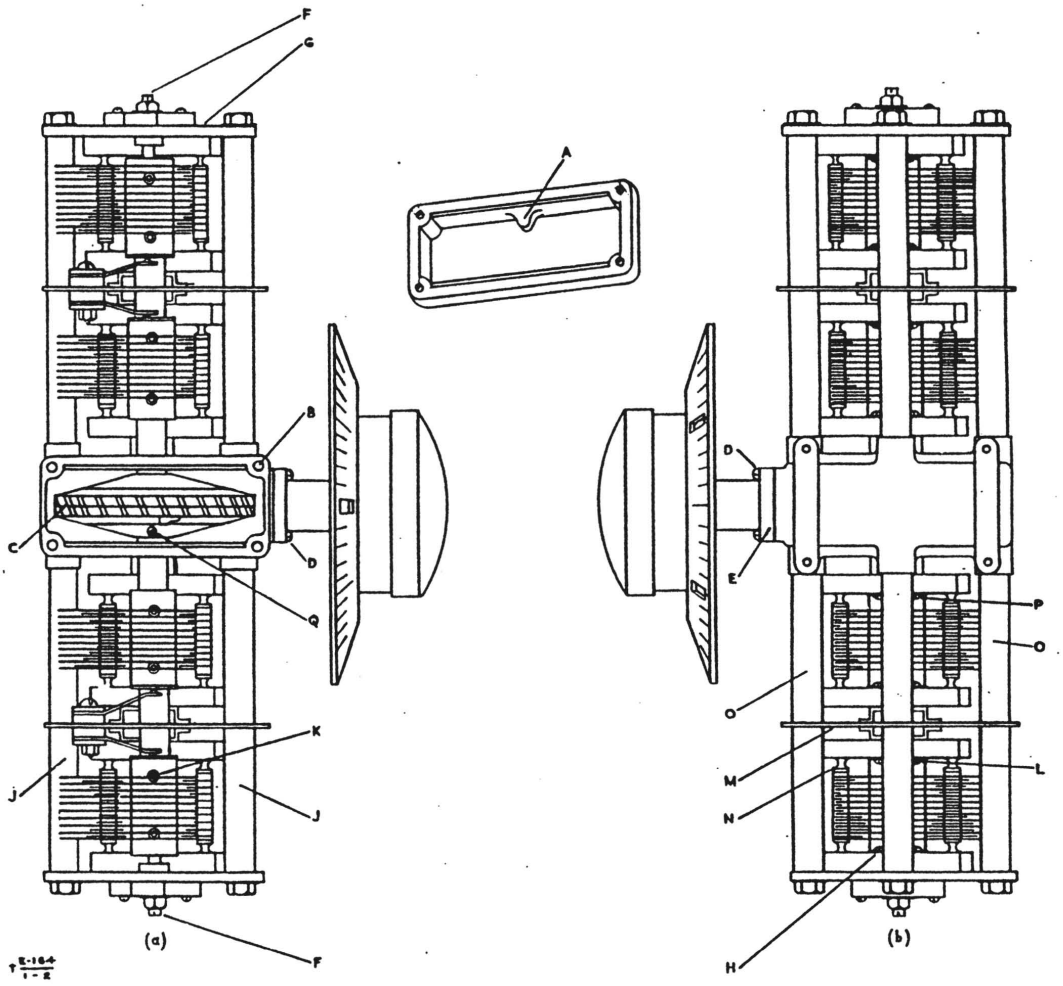

Fig 2 - Gang capacitor assembly

8. Slacken off the bearing screws, F and remove the three nuts from the end plates, G. Remove the two screws, H, securing the outer stator insulator bars to the endplates. Remove the endplates and spacers, J.

9. Loosen the Allen-screws, K, securing the outer rotors to the spindle and remove the rotors taking care not to distort the vanes. Remove the screws, L, securing the inner stator insulator bars to the screens, M, and remove the screens complete with outer stators, N and spacing pieces, O.

10. Remove the screws, P, securing the inner stator insulator bars to the gearbox and remove the inner stator assemblies.

11. Loosen the Allen-screws securing the inner rotors to the spindle and remove the rotor taking care not to distort the vanes.

12. Loosen the setscrews, Q, securing the large drive gear to the spindle and remove the spindle. Note that the gear is a die-casting and should be handled carefully and not allowed to drop out of the gearbox.

13. Reassembly is carried out by reversing the procedure detailed above but without tightening the rotor setscrews until the endplate bearing screws have been adjusted as follows.

14. After assembling the endplates and tightening the securing nuts, locate the spindle centrally between the bearings by slackening off one bearing screw and tightening the other until all end play is just taken up leaving the spindle to rotate quite freely between centres. The bearing screws must not be over-tightened

15. The rotors can now be lined up with their respective stators ensuring that the vanes are centrally located and the setscrews tightened. Check that the position of any stator relative to the remainder is the same by lining up at the maximum capacity with the front edges of the vanes in line.

16. Replace the drive spindle with thrust spring, washers, bearing and cover, ensuring that the latter is the correct way round. Replace the large gearbox cover temporarily.

17. Position the rotors so that the 'toes' of the rotors are about 3/32 inch belo the 'toes' of the stators (ie just over the maximum capacity position). Rotate the drive spindle clockwise until the dial stop is engaged; remove the gearbox lid and tighten the setscrews in the large gear wheel. Do not overtighten the screws or damage to the spindle will result.

ALIGNMENT AND SPECIFICATION TESTING

General

18. Models having air-spaced I.F. trimmers generally require very little adjustment as a result of day to day use and must not be disturbed if the I.F. amplifier has not been repaired. The alignment of sets having compression type trimmers must be checked each time the receiver undergoes repair. In the former case, it is necessary only to check the alignment to the crystal frequency (see para 24).

19. All adjustments and tests on this receiver must be carried out in a screened cage.

Test equipment

20. The following test equipment is required for alignment and specification testing:-

(a) A frequency meter covering 125kc/s to 30Mc/s.
(eg Frequency meter, SCR 211)

(b) An audio-frequency oscillator
(eg Oscillator, beat frequency, No.5, 7 or 8)

(c) An output power meter for measuring powers up to 5,000mW, at 7,000 ohms
(eg Wattmeter, absorption, A.F., No. 1 or Meters, output power, No. 3)

(d) A 1,000 ohms per volt multimeter
(eg Instruments, testing, avometer, universal, 50 range)

(e) Signal generators covering the frequency range 85kc/s to 30Mc/s.
(eg Signal generator, No. 12 (or Signal generator, No. 1)
and Signal generator, No. 15 (or Signal generator, No. 2)).

(f) A 1 : 1 ratio isolating transformer
(eg WY 0089)

(g) Loudspeaker or headphones to match 7,000 ohms.

Test conditions

21. Unless otherwise stated, the output meter set to 7,000Ω impedance will be connected across the secondary of the isolating transformer, the primary of the transformer being connected to the loudspeaker terminals. For all R.F. tests and adjustments the signal generator will be modulated to a depth of 30% at 400 c/s for I.F. tests it will be modulated 30% at 140 c/s and for crystal tests it will be modulated 30% at 90 c/s.

22. The H.T. voltage must be 250V± 10V, and the L.T. voltage 6.3V. The R.F. gain-control must be set at position 10 and the S-meter must be switched off.

I.F. and crystal filter alignment

23. Set the receiver controls as follows. A.F. gain to position 10, C.W. oscillator off, A.V.C. off, tuning dial to 0, selectivity control to maximum signal ie approximately vertical and phasing off. Connect the loudspeaker (or headphones) across the output meter and the signal generator, set up as in para 21, direct to the grid of V3. Short-circuit V4 grid to chassis. Insert coil unit E. Using the frequency meter, tune the signal generator to exactly 456kc/s and with an input of 1mV, which should be reduced as necessary during alignment to avoid overloading, line up all I.F. transformers for maximum output.

24. Tune the signal generator to 2Mc/s, switch off the modulation, and switch on the C.W. oscillator. Set the phasing control to the mid-position and turn the selectivity control fully clockwise. Remove the short-circuit from the grid of V4. Tune the receiver for peak output, and set the C.W. oscillator control for approximately a 1kc/s beat note. Then tune the receiver through zero beat to a 1kc/s note on the other side, increasing the signal generator output as necessary to keep the volume constant. The phasing control must now be set for minimum output and this setting noted. Retune to the crystal peak frequency, switch off the C.W. oscillator and switch on the signal generator modulation. Retune all I.F. transformers for maximum output. The I.F. circuits are now aligned to the crystal frequency; the response must be checked as follows and must agree with Table 1.

25. With connections as in para 23 but with the loudspeaker disconnected and the lead to V3 grid removed, set the signal generator to 456kc/s on the main dial. Tune the incremental dial for maximum output, varying the selectivity control as necessary. This setting should not then be disturbed during this test. Set the signal generator output to 100µV, and the A.F. gain for 200mW on the output meter. Increase the input to 200µV. Using the signal generator main dial, detune on either side of the peak until the output meter again shows 200mW. The frequency difference of the two settings is the bandwidth at 6db down. Repeat for 20, 40 and 60db down and for 6db down with the selectivity control fully clockwise, detuning the signal generator about 20kc/s before increasing the input and decreasing the input before tuning through the peak, to avoid damage to the output meter (Table 1, items a to e)

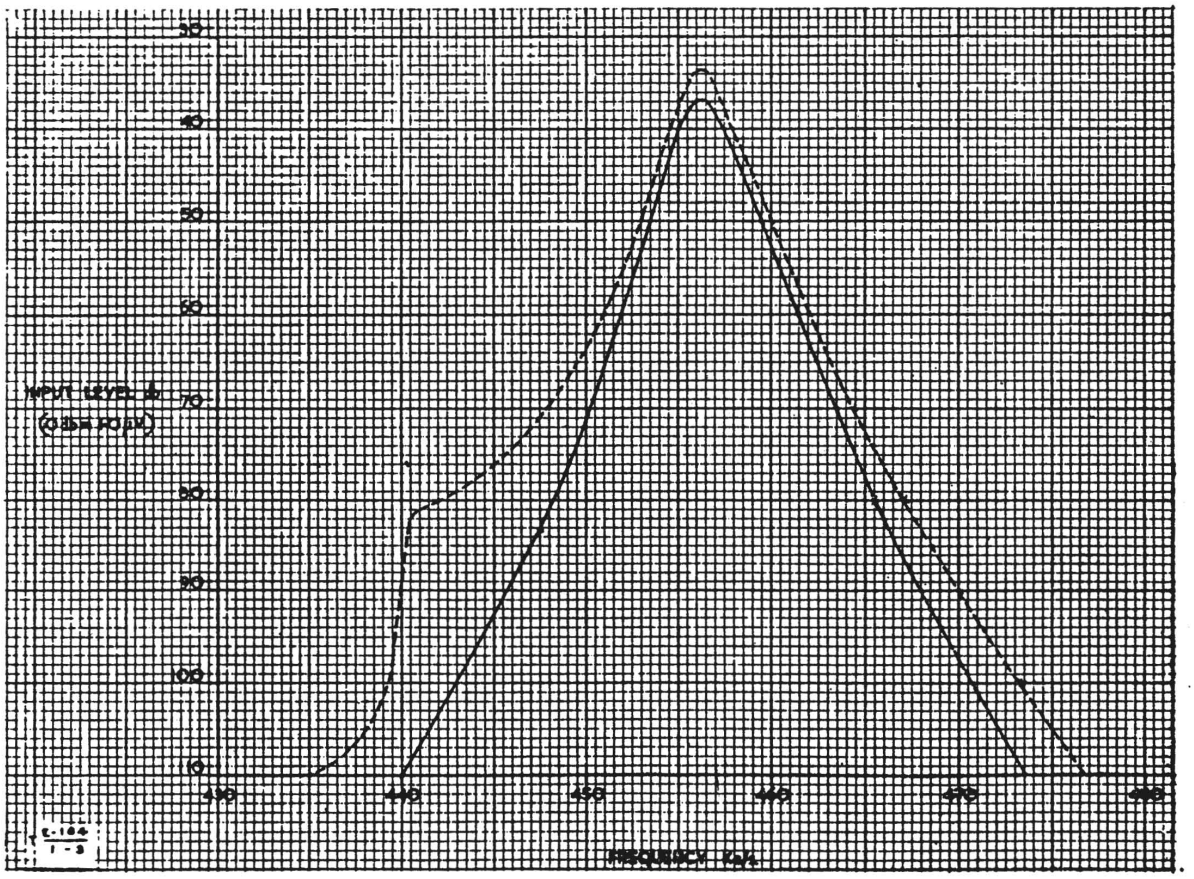

Fig 3 - I.F. Response curve

26. The I.F. response must be symmetrical and free from double humping. If either of these faults appears to be present, plot the entire I.F. curve. A specimen curve is reproduced at Fig 3. The dotted portion shows incipient double humping. This can be cured by careful adjustment of C48 but as this trimmer seriously affects the gain of the amplifier, a compromise must be made between gain and ideal curve shape. Asymmetry can be cured by very slight adjustments to the other I.F. transformers; increasing the primary capacitance and decreasing the secondary - or vice versa - will usually clear the fault.

27. No hard and fast figure of I.F. gain can be given for the R106, as it is dependent on the value of R9, which can be anything from 1kΩ to 5kΩ and is chosen in manufacture to give a satisfactory overall performance. If, however, an output of 1W cannot be obtained with conditions as in para 25 for an input of 100μV, with R.F. and A.F. gain-controls at maximum, the I.F. or A.F. stages require attention.

Crystal filter check

28. With the connections as in para 25 but with the phasing control at the setting noted in para 24 set the main dial of the signal generator to 456kc/s. Adjust the incremental dial to the crystal peak frequency, as shown by maximum output on the output meter. With a 400μV input, adjust the A.F. gain-control for 50mW output. Increase the input to 800μV and detune the incremental dial for 50mW on the output meter. Switch off the modulation, remove the signal generator output lead from V3 and with the frequency meter loosely coupled to it, determine the signal generator frequency, increasing the output if necessary to obtain a clear beat note. Repeat on the other side of the response curve. The difference in frequency is the bandwidth at 6db down and should agree with Table 1 (item f).

Item	Attenuation	Bandwidth	Control settings and test conditions
a	6db	Not less than 3.5kc/s	Phasing control at 0, selectivity control set for maximum signal, signal generator modulated 30% at 140 c/s
b	20db	Not more than 8.5kc/s	
c	40db	Not more than 16kc/s	
d	60db	Not more than 25kc	
e	6db	Not more than 2.5kc/s	Selectivity control fully clockwise. Phasing at 0
f	6db	Not more than 0.4kc/s	Phasing at noted setting, any position of selectivity control

Table 1 - I.F. response data

C.W. oscillator alignment

29. With connections as in para 23 tune the signal generator for peak output. Switch off the modulation and switch on the C.W. oscillator. Zero beat should be found with this control at position 9. Trimmers C59 and C60 must be adjusted to give this result.

R.F. alignment

30. Nine R.F. coil units are provided with the receiver. They are aligned in manufacture as a complete equipment and should not normally require any adjustment in service. If however a coil unit is replaced the alignment should be checked in the following manner.

Coil units E to J

31. With the C.W. oscillator in position 9, R.F. gain at 9, A.F. gain at 10, A.V.C off, phasing at 0, selectivity control vertical and the loudspeaker connected across the output meter, turn the tuning dial to 490 and loosely couple the frequency meter set to the frequency indicated on the coil unit calibration chart, to the aerial terminal of the receiver. Adjust C56 for zero beat. Rotate the tuning dial to 50 and reset the frequency meter. Adjust C57 (padding condenser) for zero beat. If this adjustment proves insufficient, the short-circuited turn, coupled to L15, must be adjusted. Turning this in the general direction of the winding increases the inductance and against the general direction of the winding decreases the inductance. This is a critical adjustment and must be carefully carried out.

32. When the local oscillator has been adjusted at the L.F. end of the band, the H.F. end test must be repeated and then the L.F. end tested again, until the calibration over the whole of the band is within ±3% of the indicated frequency.

Note: As frequency meter SCR 211 does not cover 90kc/s it will be necessary with coil unit J to check the second harmonic of the signal generator, tuned to 90kc/s, against the SCR 211 tuned to 180kc/s.

33. The R.F. stages can now be aligned to the local oscillator. Switch off the C.W. oscillator and replace the frequency meter by the signal generator. Switch on the modulation and set the output to 10μV at approximately the frequency indicated by 490 on the receiver tuning dial. Set the tuning dial at 490 and tune the signal generator for maximum output on the output meter, reducing A.F. gain as necessary. C36, C40 and C44 must now be adjusted for maximum output. No L.F. adjustments are provided for these coil units.

Coil units JA to JD

34. The calibration procedure at the H.F. end of the band is identical with that for coil units E to J (para 31), except that for coil unit JA two settings of C56 are possible. The lower capacitance value is correct ie local oscillator frequency higher than signal frequency.

35. Calibration at the L.F. end is accomplished by moving either a small turn inside the coil, or, in the case of coil unit JD screwing a brass slug into or out of the coil. The coil inductance is maximum when the counter-turn runs in the same direction as the main winding, or the brass slug is screwed out of the coil. It is at a minimum when the counter-turn moves in the opposite direction to the main winding, or when the brass slug is at the centre of the coil. Neither of these are critical adjustments. As in the case of coil units E to J, calibration adjustments should be repeated at each end of the band until the calibration is within ±3% of the indicated frequency.

36. R.F. stage alignment is similar to that for coil units E to J, the trimmers concerned being C36, C40 and C44 and the L.F. end adjustment is made by a counter-turn as in para 35. Adjustments should be repeated at both ends of the band until the R.F. stages are in track with the oscillator.

R.F. performance.

37. For all these tests the controls must be set as follows except where otherwise stated: R.F. gain at 10, A.F. gain set for 1W output, S-meter, phasing, and A.V.C. off. The selectivity control must be set for maximum output and the loudspeaker disconnected. The signal generator must be connected to the aerial terminal via a 500Ω resistor and the earth terminal connected to chassis. All valve shields must be in place, the lid closed and the bottom in place.

Sensitivity

38. The sensitivity must agree with column 3 of Table 2.

Second-channel selectivity

39. At each of the frequencies in column 2 of Table 2, set the A.F. gain to give an output of 1W with an input of 10μV from the signal generator. The receiver must be tuned exactly to resonance. The signal generator is now tuned approximately to the second-channel frequency in column 4 and the signal generator output increased by the amount shown in column 5. The signal generator is now tuned for maximum A.F. output at the second-channel frequency; this output should not exceed 1W. Check that the signal generator output has not varied with the change of frequency and if necessary reset at the new frequency.

Signal-to-noise ratio

40. With conditions as in para 37 and with an input of 10μV at each frequency in column 2 of Table 2, switch off the signal generator modulation. The resultant A.F. output due to noise must not exceed 10mW.

C.W. sensitivity

41. With conditions as in para 37 tune the set to each of the frequencies in column 2 of Table 2. Connect the loudspeaker across the output meter, switch off the signal generator modulation and switch on the C.W. oscillator. Set C.W. oscillator for a beat note of approximately 1kc/s, reduce the signal generator input to 2μV and remove the loudspeaker. The output must not be less than 1W.

A.V.C.

42. With conditions as in para 37 but with A.V.C. switched on, apply 10μV from the signal generator to the receiver. Set the A.F. gain control for 10mW output. Increase the input to 100,000μV. The output must not exceed 1W.

A.F. response

43. In order to obtain the low voltages necessary for this test a simple 10 to 1 attenuator (see Fig 4) must be manufactured locally. Connect the B.F.O. via the attenuator to the junction of R13 and C12 and to chassis. With the A.F. gain control set for 1W output, the A.F. response must be as shown in Table 3.

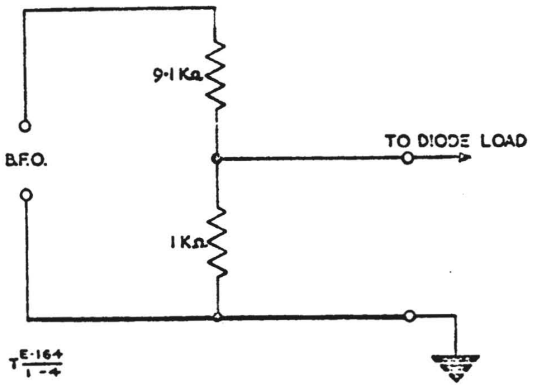

Fig 4 - B.F.O. attenuator

Coil unit (1)	Frequency (2)	Input (max) (3)	Second-channel frequency (4)	Second-channel ratio (min) (5)
JA	24Mc/s	4μV	24.912Mc/s	25db
JB	14Mc/s	4μV	14.912Mc/s	50db
JC	7Mc/s	4μV	7.912Mc/s	70db
JD	3.8Mc/s	4μV	4.712Mc/s	80db
E	1.95Mc/s	4μV	2.862Mc/s	80db
F	0.9Mc/s	4μV	1.812Mc/s	80db
G	0.4Mc/s	3μV	1.312Mc/s	80db
H	0.19Mc/s	3μV	1.102Mc/s	80db
J	0.09Mc/s	3μV	1.002Mc/s	80db

Table 2 - R.F. performance data

Frequency	Input to diode load (max)	Attenuation relative to 1kc/s
0.1kc/s	1V	+10.5db
0.2kc/s	0.45V	+3.5db
0.5kc/s	0.35V	+0.2db
1kc/s	0.3V	0db
2kc/s	0.35V	+0.2db
4kc/s	0.45V	+3.5db
6kc/s	0.5V	+4.0db
8kc/s	0.6V	+6.0db

Table 3 - A.F. response data

Note: The next page is Page 1001

Table 1001 - Specimen AF G3504

Tests recorded correspond with those detailed in Tels E 164 against the para numbers shown.

Para	Spec figure	Fig obtained	Pass
25	As Table 1 (a - e)		
28	As Table 1 (f)		
29	Position 9		
38	As column 3, Table 2		
39	As column 5, Table 2		
40	Not more than 10mW		
41	Not less than 1W		
42	Not more than 1W		
43	As column 2, Table 3		

Result of test

Signature .. ..

Table 1002 - Coil winding data

Coil and winding	Wire gauge (B and S)	No. of turns	Spacing	Inductance	D.C. resistance
		Range 50-100kc/s, coil unit J			
Aerial					
Pri	32 ESS	125	1/4 inch wave	200μH	3.3Ω
Sec	5/41 Litz	1350	3/8 inch wave	21.7mH	78.6Ω
1st R.F.					
Pri	32 ESS	75	1/4 inch wave	81μH	2Ω
Sec	5/41 Litz	1350	3/8 inch wave	26.8mH	78.6Ω
2nd R.F.					
Pri	32 DS	6.5	60 t.p.i.	1.09μH	0.2Ω
Sec	5/41 Litz	1395	3/8 inch wave	24.5mH	78.6Ω
L.O.					
Pins 2-4	32 ESS	301	7/32 inch wave	1.52μH	1.0Ω
Pins 2-5	tap	267		726μH	1Ω

Position of tap 44 turns from start of winding

Table 1002 - Coil winding data (contd)

Coil and winding	Wire gauge (B and S)	No. of turns	Spacing	Inductance	D.C. resistance
		Range 100-200kc/s, coil unit H			
Aerial					
Pri	32 ESS	156	1/4 inch wave	511μH	10Ω
Sec	32 ESS	720	5/16 inch wave	6.83mH	22Ω
1st R.F.					
Pri	38 ESS	2770	7/16 inch wave	15.4mH	33Ω
Sec	38 ESS	730	3/8 inch wave	8.32mH	25Ω
2nd R.F.					
Pri	32 DS	10	60 t.p.i.	22.2μH	53Ω
Sec	32 ESS	724	3/8 inch wave	7.73mH	23Ω
L.O.					
Pins 2-4	32 ESS	270	1/4 inch wave	1mH	19Ω
Pins 2-5	(tap)	227		0.787mH	20Ω
	Position of tap 43 turns from start of winding				
		Range 180-430kc/s, coil unit G			
Aerial					
Pri	32 ESS	87	3/16 inch wave	167μH	2.6Ω
Sec	32 ESS	402	3/16 inch wave	3mH	14.5Ω
1st R.F.					
Pri	38 ESS	2000	3/8 inch wave	42.7mH	210Ω
Sec	32 ESS	402	1/4 inch wave	3.1mH	14.5Ω
2nd R.F.					
Pri	32 EN	8	60 t.p.i.	1.63μH	0.2Ω
Sec	32 ESS	402	1/4 inch wave	3.05mH	14.5Ω
L.O. Pins					
Pins 2-4	32 ESS	202	1/4 inch wave	605μH	6.5Ω
Pins 2-5	(tap)	134		305μH	4.5Ω
	Position of tap 68 turns from start of winding				

Table 1002 - Coil winding data (contd)

Coil and winding	Wire gauge (B and S)	No. of turns	Spacing	Inductance	D.C. resistance
		Range 480-960kc/s, coil unit F			
Aerial					
Pri	30 DS	37	3/16 inch wave	25.5μH	0.7Ω
Sec	10/41 Litz	143	3/16 inch wave	377.0μH	3.8Ω
1st R.F.					
Pri	32 ESS	676	1/4 inch wave	48.5mH	45Ω
Sec	10/41 Litz	143	3/16 inch wave	387μH	3.8Ω
Cap	26 DS	1			
2nd R.F.					
Pri	30 DS	6	60 t.p.i.	1.36μH	0.1Ω
Sec	10/41 Litz	143	3/16 inch wave	379μH	3.8Ω
L.O. Pins					
Pins 2-4	10/41 Litz	95	3/16 inch wave	110μH	2.4Ω
Pins 2-5		29		79.5μH	0.8Ω
		Position of tap 66 turns from start of winding			
		Range 900-2050kc/s, coil unit E			
Aerial					
Pri	30 DS	22	3/8 inch wave	11.6μH	0.4Ω
Sec	10/41 Litz	81	3/8 inch wave	120μH	2.2Ω
1st R.F.					
Pri	36 ESS	465	1/4 inch wave	2.12mH	27Ω
Sec	10/41 Litz	81	3/16 inch wave	120μH	2.1Ω
Cap	26 DS	1			
2nd R.F.					
Pri	30 DS	16	60 t.p.i.	4.9μH	0.3Ω
Sec	10/41 Litz	81	5/32 inch wave	120μH	2.1Ω
L.O. Pins					
Pins 2-4	10/41 Litz	62	3/16 inch wave	79.2μH	1.7Ω
Pins 2-5		13		48μH	0.4Ω
		Position of tap 49 turns from start of winding			

Table 1002 - Coil winding data (contd)

Coil and winding	Wire gauge (B and S)	No. of turns	Spacing	Inductance	D.C. resistance
		Range 1.7-4Mc/s, coil unit JD			
Aerial					
Pri	32 DS	10	60 t.p.i.	4.98μH	0 .6Ω
Sec	28 EN	40	60 t.p.i.	35.8μH	0 .8Ω
1st R.F.					
Pri	36 ESS	257	3/16 inch wave	61.5μH	14.0Ω
Sec	28 EN	40	60 t.p.i.	35.9μH	0.8Ω
2nd R.F.					
Pri	36 ESS	257	3/16 inch wave	615.3μH	14Ω
Sec	28 EN	40	60 t.p.i.	35.7μH	0.18Ω
L.O.Pins					
Pins 2-4 (slug out)	28 EN	37	60 t.p.i.	30.9μH	0.8Ω
(slug in)				37.6μH	
Pins 2-5 (slug in)		30		19.1μH	0.6Ω
		Position of tap 6.5/6 turns from start of winding			
		Range 3.5 -7.3Mc/s, coil unit JC			
Aerial					
Pri	32 DS	5	Close wound	1.7μH	0.4Ω
Sec	24 EN	21.1/2	24 t.p.i.	8.97μH	0.2Ω
1st R.F.					
Pri	36 ESS	125	1/4 inch wave	156μH	6.4Ω
Sec	24 EN	21. 7/8	24 t.p.i.	9.46μH	0.2Ω
2nd R.F.					
Pri	36 ESS	125	1/4 inch wave	156μH	6.4Ω
Sec	24 EN	21.7/8	24 t.p.i.	10.2μH	0.2Ω
L.O. Pins					
Pins 2-4	24 EN	19.1/2	24 t.p.i.	7.69μH	0.2Ω
Pins 2-5		15.3/4		5.67μH	0.16Ω
		Position of tap 3.3/4 turns from start of winding			

Table 1002 - Coil winding data (contd)

Coil and winding	Wire gauge (B and S)	No. of turns	Spacing	Inductance	D.C. resistance
		Range 7-14.4Mc/s, coil unit JB			
Aerial					
Pri	32 DS	4	Close wound	1.22μH	0.3Ω
Sec	24 EN	7	24 t.p.i.	1.38μH	0.1Ω
Cap	26 DS	1/2			
1st R.F.					
Pri	36 ESS	65	1/4 inch wave	39.1μH	3.3Ω
Sec	24 EN	8.11/16	24 t.p.i.	2.3μH	0.1Ω
Cap	32 DS	1/2			
2nd R.F.					
Pri	32 DS	2.3/4	24 t.p.i.	0.653μH	0.1Ω
Sec	24 EN	7.1/2	24 t.p.i.	2.163μH	0.1Ω
L.O. Pins					
Pins 2-4	22 EN	10	24 t.p.i.	2.0μH	-
Pins 2-5		7.1/6		0.537μH	-
		Position of tap 2.5/6 turns from start of winding			
		Range 14-30Mc/s, coil unit JA			
Aerial					
Pri	32 DS	5	Close wound	0.523μH	0.1Ω
Sec	22 EN	5	24 t.p.i.	0.661μH	-
1st R.F.					
Pri	36 DS	9.1/2	24 t.p.i.	1.35μH	0.7Ω
Sec	22 EN	10	24 t.p.i.	0.314μH	-
Ter	40 EN	50	230 t.p.i.	49.3μH	9.7Ω
2nd R.F.					
Pri	36 DS	9.1/2	24 t.p.i.	1.33μH	0.7Ω
Sec	22 EN	10	24 t.p.i.	0.283μH	-
Ter	40 EN	50	230 t.p.i.	48.6μH	9.7Ω
L.O. Pins					
Pins 2-4	22 EN	6.1/3	24 t.p.i.	0.780μH	-
Pins 2-5	(tap 1)	4.1/3			-
	(tap 2)	1.7/12			-
	Position of taps. 2 turns and 4.3/4 turns from start of winding				

Table 1002 - Coil winding data (contd)

Coil and winding	Wire gauge (B and S)	No. of turns	Spacing	Inductance	D.C. resistance
		1st and 2nd I.F. transformer (L7/8 and L9)			
Pri } input	10/41 Litz	235	3/16 inch wave	1.5mH	7.3Ω
Sec } input	10/41 Litz	235	3/16 inch wave	1.5mH	7.3Ω
output	10/41 Litz	297	3/16 inch wave	1.93mH	10Ω
tap	10/41 Litz	233		1.48mH	7.2Ω
		3rd I.F. transformer (L10/11)			
Pri	10/41 Litz	260	3/16 inch wave	1.57mH	7.6Ω
Sec	10/41 Litz	260	3/16 inch wave	1.57mH	7.6Ω
		4th I.F. transformer (L12/13)			
Pri	10/41 Litz	260	3/16 inch wave	1.57mH	7.6Ω
Sec	10/41 Litz	260	3/16 inch wave	1.57mH	7.6Ω
		C.W. oscillator transformer			
Overall	32 ESS	223	1/4 inch wave	860μH	7.1Ω
Tap		152		470μH	4.9Ω

N.B. The coils should be measured to the following tolerances.

Coils E, F and G should be wound without the iron dust core; this should be inserted when measuring the coil inductance and its position varied to give the inductance figure stated to within 2%. Cores should be locked in position with YC C0600 wax, sealing, iron dust core.

Coil JA. The local oscillator coil should be wound to the limits shown.

All other coils should be wound to within 3% of the stated value. Their actual value will be dependent upon the position of the counter turn (paras 35-36) or the short-circuited turn (para 31).

57/Maint/4016

END

JANUARY, 1945

RESTRICTED

The information given in this document is not to be communicated, either directly or indirectly to the Press or to any person not authorized to receive it.

PL/ESNA-6008

COVERING MAINTENANCE SCHEDULES:
N.A. 1370
N.A. 1373
N.A. 1802
N.A. 1805

PARTS LISTS

RECEPTION SETS R. 106, MKs. 1 & 2

(NATIONAL CO. MODELS HRO, HRO-M, HRO-MX AND HRO-5T)

BRITISH ARMY STAFF
NORTH AMERICA

READ THIS

PREFACE

1. The Catalogue Numbers and Designations in this Parts List must always be used when demanding maintenance spares.

   Any Lists issued prior to the date of this publication, are therefore superseded by this Parts List, in respect of Catalogue Numbers and Designations.

2. Although U.S. Signal Corps stock numbers and designations are used, slight alterations have been made to conform with accepted British Cataloguing and Designating standards, i.e.

   (a)

   U.S. Signal Corps stock numbers bear the prefix letters of the relevant V.A.O.S. Section.

   (b)

   U.S. Signal Corps main nouns (and type numbers, where applicable) have been used in the designations throughout this list.

   In many instances, however, there is a great difference between American and British terminology when referring to Signal Components.

   Owing to this variance in nomenclature the corresponding British name has been included in brackets in the designation to avoid confusion and to assist Units in utilizing this List in conjunction with any other British or U.S. Army documents already in existence.

AND THESE

NOTES

1. Items in this Parts List marked with an asterisk (*) are not approved maintenance items but may be issued until stocks are exhausted.

   ITEMS NOT SO MARKED ARE APPROVED MAINTENANCE ITEMS FOR THE EQUIPMENT CONCERNED AND WILL BE DEMANDED IN THE USUAL MANNER.

   SEE ALSO PREFACE - Para. 1.

2. This Parts List has been prepared by British Army Staff, North America, in close liaison with the U.S. Signal Corps and the manufacturing Plants concerned. Any queries on this list should be addressed to:-

   BRITISH ARMY STAFF
   Q.M.G. BRANCH
   1901 K STREET, N.W.
   WASHINGTON, D.C., U.S.A.

   quoting Parts List PL/ESNA-6008.

3. THE 'ISSUES-IN-LIEU' QUOTED IN THIS PARTS LIST APPLY ONLY TO THE RECEPTION SETS R-106 MK. 1 & 2 AND IT MUST NOT BE ASSUMED THAT THEY MAY APPLY TO OTHER EQUIPMENTS.

PARTS LIST PL/ESNA-6008

for

RECEPTION SETS R. 106, MK. 1 & MK. 2

INCLUDES THE FOLLOWING COMPONENT LISTS:

CL/ESNA-33	Reception Sets, R.106, Mk. 1 & 2.
CL/ESNA-34	Pack, Vibrator (Vibra-pack) 686S, Complete.
CL/ESNA-35	Power Supply Unit, Type 697, Complete.

INDEX TO MANUFACTURERS' CODE

A-1	Aerovox Corp.
A-17	Arrow, Hart & Hegeman Co.
C-6	Cinch Mfg. Corp.
C-15	Cornell Dubilier Electric Co.
H-20	Holtzer-Cabot Electric Co.
N-1	National Co.
S-8	Sprague Products Co.

RECEPTION SETS R106 MK. 1 (ZA/2C4522, -2)
(MODELS HRO, HRO-M & HRO-MX)
RECEPTION SETS R106 MK. 2 (ZA/USA/1023)
(MODEL HRO-5T)

(1)	(2)	(3)	(4)	(5)	(6)	(7)	(8)	(9)	(10)
ITEM No.	VAOS SEC.	MFRS. CODE	PIECE PT. OR DWG. No.	CATALOGUE No.	DESIGNATION	SCH. OR ILL. No.	MK. 1	MK. 2	ISSUE IN LIEU
1.	Z1	N-1	BM-38	ZA/3H3986	PACK, vibrator (VIBRA-PACK) 686S ..... (For spares see CL-34)		1	1	ZAA0318
2.	Z1	N-1	BM-75	ZA/3H4496-1	POWER SUPPLY UNIT, type 697 ..... (For spares see CL-35)		1	1	
3.	Z1	N-1		ZA/2C4529-22	RECEPTION SET R106, Mk. 1 ..... (Receivers HRO, HRO-M & HRO-MX)		1		ZA5751 w/o valves
4.	Z1	N-1		ZA/USA/2023	RECEPTION SET R106, Mk. 2 ..... (Receivers HRO-5T)			1	
5.	Z1			ZA/JAN/6B7	TUBE (VALVES), type 6B7 ..... (1 in use; 1 spare)		2		ZA5627
6.	Z1			ZA/JAN/6C6	TUBE (VALVES), type 6C6 ..... (3 in use; 3 spare)		6		ZA5625
7.	Z1			ZA/JAN/6D6	TUBE (VALVES), type 6D6 ..... (4 in use; 4 spare)		8		ZA5626
8.	Z1			ZA/JAN/6J7	TUBE (VALVES), type 6J7 (VT-91) ..... (3 in use; 3 spare)			6	ZA12629
9.	Z1			ZA/JAN/6K7	TUBE (VALVES), type 6K7 (VT-86) ..... (4 in use; 4 spare)			8	ZA12630
10.	Z1			ZA/JAN/6SQ7	TUBE (VALVES), type 6SQ7 (VT-103) ..... (1 in use; 1 spare)			2	ZA3444
11.	Z1			ZA/JAN/6V6GT/G	TUBE (VALVES), type 6V6GT/G ..... (1 in use; 1 spare)			2	ZA17191
12.	Z1			ZA/JAN/42	TUBE (VALVES), type 42 ..... (1 in use; 1 spare)		2		ZA7125

(1)	(2)	(3)	(4)	(5)	(6)	(7)	(8)	(9)	(10)
ITEM No.	VAOS SEC.	MFRS. CODE	PIECE PT. OR DWG. No.	CATALOGUE No.	DESIGNATION	SCH. OR ILL. No.	MK. 1	MK. 2	ISSUE IN LIEU
					RECEPTION SET R106, Mk. 1 & 2				
13.	Z1	N-1	F350 pt. 1	ZA/3F891-20	AMMETER DC, 0-1 mA., flush mtg., 2-1/2-in. molded phenolic case (Replaces ZN3041, WB2020, ZN3043)		1	1	ZN3043
14.	Z1	N-1	SA-21	ZA/3Z774-2	BINDING POST ASS'Y (BLOCKS, terminal), 2 way, 2-1/8-in. lg. x 3/4-in. w. x 1-1/4-in. h. ...		1	1	ZN3023
15.	Z1	N-1	C-627	ZA/3E4013-3	CABLE ASS'Y (CONNECTORS), 4 pt., 5-ft. with plug	W1	1	1	WB1535 & ZA3806 together
16.	Z1	C-6 N-1	6020 E726	ZA/2Z1607-19	CAP, valve, shield, 25/32-in. I.D. x 1-in. h.	6K7 6J7		7	
17.	Z1	N-1	SA-17 pt. 2	ZA/3D9002-12	CAPACITOR, mica, 2 mmF. ±50%, 400-v.D.C. wkg., No. 1, U.S. type	C-33	1	1	
18.	Z1	N-1	D825D pt.403	ZA/3D9010-26.2	CAPACITOR, ceramic, 10 mmF. ±10%, 500-v.D.C. wkg., No. 4, U.S. type	C-44	1	1	
19.	Z1	N-1	D825C pt.304	ZA/3D9100-57	CAPACITOR, ceramic, 100 mmF. ±5%, 500-v.D.C. wkg. No. 1, U.S. type ..... (Sch. ref: C12,C30,C31,C32,C42)		5	5	ZA1439
20.	Z1	N-1	D825C pt.315	ZA/3D9250-49.1	CAPACITOR, ceramic, 250 mmF. ±10%, 500-v.D.C. wkg., No. 1, U.S. type	C-13	1	1	ZA1467
21.	Z1	N-1	E603 pt. 3	ZA/3D9500-100.1	CAPACITOR, ceramic, 500 mmF. ±10%, 1000-v.D.C. wkg., No. 1, U.S. type	C-16	1	1	ZA1441
22.	Z1	A-1 N-1	1467 D830 pt. 2	ZA/3K3010211	CAPACITOR, mica, .001 mF. ±10%, 500-v.D.C. wkg., No. 3, U.S. type	C-29	1	1	ZA1400

(1)	(2)	(3)	(4)	(5)	(6)	(7)	(8)	(9)	(10)
ITEM No.	VAOS SEC.	MFRS. CODE	PIECE PT. OR DWG. No.	CATALOGUE No.	DESIGNATION	SCH. OR ILL. No.	MK.1	MK.2	ISSUE IN LIEU
23.	Z1	N-1	D827 pt. 7	ZA/3DA10-196	CAPACITOR, paper, 0.01 mF. +20%-10%, 600-v.D.C. wkg., No. 1, U.S. type ..... (Sch. ref: C2,C7,C9,C15)	C-24 C-26 C-28	7	7	ZA1622
24.	Z1	N-1	D827 pt. 11	ZA/3DA100-129.2	CAPACITOR, paper, 0.1 mF. +20%-10%, 400-v.D.C. wkg., No. 1, U.S. type ..... (Sch. ref: C1,C3,C6,C10,C14,C17, C20,C21,C22,C23)		10	10	ZA1367 or ZA1588
25.	Z1	N-1	D827 pt. 13	ZA/3DA100-177.1	CAPACITOR, paper, 0.1 mF. +20%-10%, 600-v.D.C. wkg., No. 1, U.S. type ..... (Sch. ref: C4,C5,C18,C25)		4	4	ZA1367 or ZA1588
26.	Z1	N-1	D827 pt. 19	ZA/3DA250-73	CAPACITOR, paper, 0.25 mF. +20%-10%, 600-v.D.C. wkg., No. 1, U.S. type	C-8	1	1	ZA1698
27.	Z1	N-1	E340 pt. 1	ZA/3DB10-47	CAPACITOR, electrolytic, 10 mF. +150%-0%, 50-v.D.C. wkg.	C-11 C-19	2	2	ZA1625
28.	Z1	N-1	SA-14B	ZA/3D9225V-7	CAPACITOR, variable, 4 gang, 12-225 mmF.		1	1	ZA1695
29.	Z1	N-1	SA-13	ZA/3D9035V-33	CAPACITOR, variable, 5-35mmF. fitted w/bracket..... (Note: comprises ZA1694, Condensers variable Y3A & ZA20107)	C-27	1	1	ZA1694 together w/ ZA20107
30.	Z1	C-6 N-1	6011 F137	ZA/2C4529/2	CLIP, grid, valve, Cinch No. 6011	6K7 6J7		7	
31.	Z1	N-1	D-236	ZA/2Z2724	CLIP, grid, valve connection No. 1, U.S. type	6D6 6C6	8		ZA12297
32.	Z1	N-1	SA-52-T	ZA/3C2625	COIL UNIT, 50 to 100 Kc/s		1	1	ZA5491/1
33.	Z1	N-1	SA-52-O	ZA/3C2625-1	COIL UNIT, 100 to 200 Kc/s		1	1	ZA5491/2
34.	Z1	N-1	SA-51-V	ZA/3C2625-2	COIL UNIT, 180 to 430 Kc/s		1	1	ZA5491/3
35.	Z1	N-1	SA-51-Q	ZA/3C2625-3	COIL UNIT, 480 to 960 Kc/s		1	1	ZA5491/4
36.	Z1	N-1	SA-51-M	ZA/3C2625-4	COIL UNIT, 900 to 2050 Kc/s		1	1	ZA5491/5
37.	Z1	N-1	SA-58-J	ZA/3C2625-5	COIL UNIT, 1-7 to 4 Mc/s		1	1	ZA5491/6

(1)	(2)	(3)	(4)	(5)	(6)	(7)	(8)	(9)	(10)
ITEM No.	VAOS SEC.	MFRS. CODE	PIECE PT. OR DWG. No.	CATALOGUE No.	DESIGNATION	SCH. OR ILL. No.	MK. 1	MK. 2	ISSUE IN LIEU
38.	Z1	N-1	SA-58-E	ZA/3C3625-7	COIL UNIT, 3.5 to 7.3 Mc/s		1	1	ZA5491/7
39.	Z1	N-1	SA-57-T	ZA/3C3625-6	COIL UNIT, 7 to 14.4 Mc/s		1	1	ZA5491/8
40.	Z1	N-1	SA-57-O	ZA/3C2625-8	COIL UNIT, 14 to 30 Mc/s		1		ZA5491/9
41.	Z1	N-1	SA-2677	ZA/USA/2021	COIL UNIT, 14 to 30 Mc/s, special ..... (Note: not interchangeable with SA-57-O, differs in wiring and capacitors, for use on 5T set only)			1	
42.	Z1	N-1	SA-81-B	*	CRYSTAL (OSCILLATOR QUARTZ 456 Kc/s) ..... (Now replaced by ZA/3Z1891-19, not plug in type)				ZN3031
43.	Z1	N-1	SA-645	ZA/2Z3764.26	DIAL ASSEMBLY (HANDLE & DIAL ASS'Y), main tuning, No. 1, U.S. type	K1	1	1	ZA1696
44.	Z1	N-1	SA-81 } SA-2491 }	*ZA/3Z1891-19	FILTER, Crystal Unit I.F., with crystal 456 Kc/s ..... (When used on Rec. Sets R106 Mk. 2, ZA/2C4529/2 must be fitted)	T1	1	1	ZN3033
45.	Z1	N-1	E923 pt. 8	ZA/6Z4856-1	GROMMET, rubber, 11.16-in. O.D. x 3/8-in. I.D. x 9/32-in. thk.	G1	1	1	
46.	Z1	N-1	B-230	ZA/USA/2022	HANDLE, panel, steel, 1/4-in. thk., tapped 3/8-in., No. 6-32 thd.	H1	2	2	
47.	Z1	N-1	E958 pt. 1	ZA/2Z5598-8	JACK, telephone, single, No. 4, U.S. type	J1	1	1	ZN3042
48.	Z1	N-1	SA-4	ZA/2Z5824.19	KNOB (HANDLE & DIAL ASS'Y) c/w etched plate, AF gain	K6	1	1	ZN3036

(1)	(2)	(3)	(4)	(5)	(6)	(7)	(8)	(9)	(10)
Item No.	VAOS Sec.	Mfrs. Code	Piece Pt. or Dwg. No.	Catalogue No.	Designation	Sch. or Ill. No.	Mk. 1	Mk. 1	Issue in Lieu
49.	Z1	N-1	SA-6	ZA/2Z5824.21	KNOB (HANDLE & DIAL ASS'Y) c/w etched plate, c.w. oscillator	K5	1	1	ZN3037
50.	Z1	N-1	SA-7	ZA/2Z5824.22	KNOB (HANDLE & DIAL ASS'Y) c/w etched plate phasing	K3	1	1	ZN3038
51.	Z1	N-1	SA-5	ZA/2Z5824.20	KNOB (HANDLE & DIAL ASS'Y). c/w etched plate, RF gain	K4	1	1	ZN3039
52.	Z1	N-1	SA-1273	ZA/2Z5824.2	KNOB (HANDLE & DIAL ASS'Y) c/w etched plate, selectivity ..... (ZN3040 is for handle only, replaced by ZA/2Z5824.2)	K2	1	1	ZN3040
53.	Z1	N-1	F154 pt. 1	ZA/2Z5883-92	LAMP ASSEMBLY (HOLDERS, LAMP), No. 1, U.S. type	L1	1	1	ZA16533
54.	W2	N-1	F136 pt. 6	WB/2Z5952	LAMP, LM-52, 6-8-v., 0.15 amp., MBC		1	1	WB2019
55.	Z1	C-6 N-1	1510A D947 pt. 3	*ZA/3Z3915-10A	MOUNTING STRIP (STRIPS TAG), 2 way, type 1510A		12	12	ZA14730
56.	Z2	N-1	E947 pt. 1	ZB/6L3677-32.1	NUT LOCK, brass hex., 15/32-32 thd. x .078-in. thk., 5/8-in. overall, nickel-plated		3	3	
57.	Z1	N-1	D831 pt. 2	ZA/2Z7279-22	POTENTIOMETER, 1000 ohms, 1 watt	R32	1	1	ZN3045
58.	Z1	N-1	D771 pt. 4	ZA/2Z7280-28	POTENTIOMETER, 10,000 ohms, 1.5 watt	R1	1	1	ZA8113
59.	Z1	N-1	D833 pt. 2	ZA/2Z7272-23	POTENTIOMETER, 500,000 ohms, ±20%, 2 watt		1	1	ZA6587
60.	Z1	N-1	F156 pt. 1	ZA/3Z6006D4	RESISTOR (RESISTANCES), wire wound, 64-ohms 10%, 0.2 amp.	R21	1	1	ZN3046
61.	Z1	N-1	E635 pt. 8	ZA/3Z6030-71	RESISTOR, carbon, 1/2-w., 300 ohms ±10%, Speer No. GC1-1/2 ..... OR	R4	3	3	ZA3417

(1)	(2)	(3)	(4)	(5)	(6)	(7)	(8)	(9)	(10)
ITEM No.	VAOS SEC.	MFRS. CODE	PIECE PT. OR DWG. No.	CATALOGUE No.	DESIGNATION	SCH. OR ILL. No.	MK. 1	MK. 2	ISSUE IN LIEU
62.	Z1			ZA/RC21BF331K	RESISTOR, carbon, 1/2-w., 330 ohms ±10%, type 21BF	R4	3	3	ZA3417
63.	Z1	N-1	E635 pt. 11	ZA/3Z6080-44	RESISTOR, carbon, 1/2-w., 800 ohms ±10%, Speer, No. SC1-1/2	R20	1	1	ZA3811
					OR				
64.	Z1	N-1		ZA/RC21BF821K	RESISTOR, carbon, 1/2-w., 820 ohms ±10%, type 21BF	R20	1	1	ZA3811
65.	Z1	N-1	E635 pt. 14	ZA/3Z6200-100	RESISTOR, carbon, 1/2-w., 2000 ohms ±10%, Speer, No. SC1-1/2	R20	4	4	ZA6439
					OR				
66.	Z1			ZA/RC21BF222K	RESISTOR, carbon, 1/2-w., 2200 ohms ±10%, type 21BF	R20	4	4	ZA6439
67.	Z1	N-1	E637 pt. 15	ZA/3Z6250-63	RESISTOR, carbon, 1/2-w., 2500 ohms ±10%, Speer, No. SC1-1/2	R11	1	1	ZA6529
					OR				
68.	Z1			ZA/RC21BF222K	RESISTOR, carbon, 1/2-w., 2200 ohms ±10%, type 21BF	R11	1	1	ZA6529
69.	Z1	N-1	E635 pt. 17	ZA/3Z6500-150	RESISTOR, carbon, 1/2-w., 5000 ohms ±10%, Ohio Carbon No. PJ	R2	1	1	ZA6441
					OR				
70.	Z1			ZA/RC21BF472K	RESISTOR, carbon, 1/2-w., 4700 ohms ±10%, type 21BF	R2	1	1	ZA6441
71.	Z1	N-1	E635 pt. 19	ZA/3Z6620-105	RESISTOR, carbon, 1/2-w., 20,000 ohms ±10%, Speer, No. SC1-1/2	R16	2	2	ZA6442
					OR				
72.	Z1			ZA/RC21BF223K	RESISTOR, carbon, 1/2-w., 22,000 ohms ±10%, type 21BF ...	R16	2	2	ZA6442

(1)	(2)	(3)	(4)	(5)	(6)	(7)	(8)	(9)	(10)
ITEM No.	VAOS SEC.	MFRS. CODE	PIECE PT. OR DWG. No.	CATALOGUE No.	DESIGNATION	SCH. OR ILL.No.	MK.1	MK.2	ISSUE IN LIEU
73.	Z1	N-1	E635 pt. 22	ZA/3Z6650-138	RESISTOR, carbon, 1/2-w., 50,000 ohms ±20%, Speer No. SC1-1/2	R13	2	2	ZA6536
					OR				
74.	Z1			ZA/RC21BF473K	RESISTOR, carbon, 1/2-w., 47,000 ohms ±10%, type 21BF ...	R13	2	2	ZA6536
75.	Z1	N-1	E635 pt. 24	ZA/RC21BF104K	RESISTOR, carbon, 1/2-w., 100,000 ohms ±10%, type 21BF ..	R7	4	4	ZA6537
76.	Z1	N-1	E635 pt. 25	ZA/3Z6725-37	RESISTOR, carbon, 1/2-w., 250,000 ohms ±10%, Ohio Carbon No. PJ	R14 } R23 }	2	2	ZA6445
					OR				
77.	Z1			ZA/RC21BF224K	RESISTOR, carbon, 1/2-w., 220,000 ohms ±10%, type 21BF ..	R14 } R23 }	2	2	ZA6445
78.	Z1	N-1	E635 pt. 26	ZA/3ZK6750-42	RESISTOR, carbon, 1/2-w., 500,000 ohms ±10%, Centralab No. 710		7	7	ZA6540
					OR				
79.	Z1			ZA/RC21BF474K	RESISTOR, carbon, 1/2-w., 470,000 ohms ±10%, type 21BF .. (Sch. ref: R3,R8,R12,R19, R26,R31,R28)		7	7	ZA6540
80.	Z1	N-1	E636-10	ZA/RC31BF473K	RESISTOR, carbon, 1 w., 50,000 ohms ±10%, type 31BF ...	R18		1	
81.	Z1	N-1	E637 pt. 5	ZA/RC41BF331K	RESISTOR, carbon, 2 w., 300 ohms ±10%, type 41BF	R25		1	
82.	Z1	N-1	E637 pt. 7	ZA/3Z6050-95	RESISTOR, carbon, 2 w., 500 ohms ±10%, Speer No. S1-2	R25	1		ZA3807
					OR				
83.	Z1			ZA/RC41BF471K	RESISTOR, carbon, 2 w., 470 ohms ±10%, type 41BF	R25	1		ZA3807

(1)	(2)	(3)	(4)	(5)	(6)	(7)	(8)	(9)	(10)
ITEM No.	VAOS SEC.	MFRS. CODE	PIECE PT. OR DWG. No.	CATALOGUE No.	DESIGNATION	SCH. OR ILL. No.	MK.1	MK.2	ISSUE IN LIEU
84.	Z1	N-1	E637 pt. 14	ZA/RC41BF153K	RESISTER, carbon, 2 w., 15,000 ohms ±10%, type 41BF	R10	1	1	ZA3808
85.	Z1	N-1	E637 pt. 16	ZA/3Z6630-56	RESISTOR, carbon, 2 w., 30,000 ohms ±10%, Speer No. S1-2	R15	1	1	ZA3809
					OR				
86.	Z1			ZA/RC41BF333K	RESISTOR, carbon, 2 w., 33,000 ohms ±10%, type 41BF	R15	1	1	ZA3809
87.	Z1	N-1	E637 pt. 18	ZA/RC41BF104K	RESISTOR, carbon, 2 w., 100,000 ohms ±10%, type 41BF	R17	2		ZA3810
88.	Z1	N-1	T78	ZA/2ZK8309-1	SHIELD (CANS), screening valve, alum, 4-1/2-in. lg. x 1.5/8-in. dia. ..... (Includes body, base & cap)	6B7 6C6 6D6	8		1 each of the following: ZN3029,ZN3030, ZN3028
89.	Z1	N-1	E321 pt. 1	ZA/2Z8676.58	SOCKET (HOLDERS), tube, 6 prong, No. 6, U.S. type		4		ZA4273
90.	Z1	N-1	SA-72	ZA/2Z8676.59	SOCKET (HOLDERS), tube, 6 prong, No. 7, U.S. type		4		ZA3804
91.	Z1	N-1	SA-73	ZA/2Z8677.39	SOCKET (HOLDERS), tube, 7 prong, small, No. 2, U.S. type		1		ZA3805
92.	Z1	N-1	SA-451	ZA/2Z8678.119	SOCKET (HOLDERS), tube, 8 prong, No. 28, U.S. type			9	
93.	Z1	A-17 N-1	21350E F303 pt. 1	ZA/3Z9858-8.32	SWITCH, toggle, SPDT, 3 amp., 250-v., No. 1, U.S. type	X3	1	1	ZA3812
94.	Z1	A-17 N-1	80994 D851 pt. 2	ZA/3Z9858-8.33	SWITCH, toggle, SPST, 3 amp., 250-v., No. 2, U.S. type	X1 X4	2	2	ZA8724:note ZA3813 replaced by ZA8724

(1)	(2)	(3)	(4)	(5)	(6)	(7)	(8)	(9)	(10)
ITEM No.	VAOS SEC.	MFRS. CODE	PIECE PT. OR DWG. No.	CATALOGUE No.	DESIGNATION	SCH. OR ILL. No.	MK. 1	MK. 2	ISSUE IN LIEU
95.	Z1	A-17 N-1	20942 E245 pt. 1	ZA/3Z9858-8.31	SWITCH, toggle, SPST, 3 amp., 250-v., No. 3, U.S. type	X2	1	1	ZA3814
96.	Z1	C-6 N-1	1529 D947 pt. 6	*ZA/2Z9402.100	TERMINAL BOARD, bakelite, 2 contact, 1.1/8-in. lg. x 3/8-in. w. x 1/16-in. thk.		2	2	ZA11581
97.	Z1	C-6 N-1	1520A D947 pt. 5	*ZA/4G1668B/T13	TERMINAL BOARD (STRIPS tag) bakelite, 3 way, 1/8-in. lg. x 21/32-in. overall			1	
98.	Z1	N-1	SA-22-G	*ZA/2Z9405.45	TERMINAL BRUSH BOARD (BRUSHES), 5 contact, No. 1, U.S. type ..... (Used also in place of terminal board, 4 contact)		1	1	ZN3022 will also replace ZN3021. ZA/2Z9405.45 only maintained.
99.	Z1	C-6 N-1	1513 D947 pt. 2	*ZA/2Z9401	TERMINAL STRIP (STRIPS tag) bakelite, 2 contact, 1-1/4-in. lg. x 5/8-in. w. x 1/8-in. thk.		4	4	
100.	Z1	C-6 N-1	1520 D947 pt. 4	*ZA/2Z9402.37	TERMINAL STRIP, bakelite, 1.3/16-in. lg. x 3/8-in w. x 3/32-in. thk.		7	7	ZA12462
101.	Z1	C-6 N-1	1531 D947 pt. 8	*ZA/2Z9479.3	TERMINAL STRIP (STRIPS tag) bakelite, 4 contact, 1.9/16-in. lg. x 3/8-in. w. x 1/16-in. thk.		1	1	ZA19761
102.	Z1	N-1	SA-41H SA-2493	ZA/2Z9644.10	TRANSFORMER, BFO, 456 Kc/s (When used on Rec. Set R106 Mk. 2, ZA/2C4529/2 must be fitted)	T-4	1	1	ZN3032
103.	Z1	N-1	SA-41F SA-2492	ZA/2Z9641.82	TRANSFORMER, I.F., interstage, 456 Kc/s ..... (When used on Rec. Sets R106 Mk. 2, ZA/2C4529/2 must be fitted)	T-2	1	1	ZN3035

(1)	(2)	(3)	(4)	(5)	(6)	(7)	(8)	(9)	(10)
ITEM No.	VAOS SEC.	MFRS. CODE	PIECE PT. OR DWG. No.	CATALOGUE No.	DESIGNATION	SCH. OR ILL.No.	MK.1	MK.2	ISSUE IN LIEU
104.	Z1	N-1	SA-41G	ZA/2Z9641.81	TRANSFORMER, I.F., output 456 Kc/s	T-3	1	1	ZN3034
105.	Z1			ZA/JAN/6B7	TUBE (VALVES), type 6B7		1		ZA5627
106.	Z1			ZA/JAN/6C6	TUBE (VALVES), type 6C6		3		ZA5625
107.	Z1			ZA/JAN/6D6	TUBE (VALVES), type 6D6		4		ZA5626
108.	Z1			ZA/JAN/6J7	TUBE (VALVES), type 6J7, (VT-91)			3	ZA12629
109.	Z1			ZA/JAN/6K7	TUBE (VALVES), type 6K7, (VT-86)			4	ZA12630
110.	Z1			ZA/JAN/6SQ7	TUBE (VALVES), type 6SQ7, (VT-103)			1	ZA3444
111.	Z1			ZA/JAN/6V6GT/G	TUBE (VALVES), type 6V6GT/G			1	ZA17191
112.	Z1			ZA/JAN/42	TUBE (VALVES), type 42		1		ZA7125

PACK, VIBRATOR, (VIBRA-PACK) 686S, COMPLETE (ZA/ 3986)

(1)	(2)	(3)	(4)	(5)	(6)	(7)	(8)	(9)
Item No.	VAOS Sec.	Mfrs. Code	Piece Pt. or Dwg. No.	Catalogue No.	Designation	Sch. or Ill. No.	No. Off	Issue in Lieu
1.	Z1	N-1	E337 pt. 3	ZA/3DB8-82	CAPACITOR, electrolytic, 2 section, 8 + 8 mF. +40%-10%, 475-v.D.C. wkg.	C-2, C-3	1	
2.	Z1	N-1	E338 pt. 15	ZA/3DB500-13	CAPACITOR, electrolytic, 500 mF., 15-v.D.C. wkg.	C-1	1	
3.	Z1	N-1	SA-31B	ZA/3C326-31B	COIL, choke filter, 17 h. ±20%, 80 mA., 300 ohms, No. 2, U.S. type	L-1	1	
4.	Z1	N-1	SA-869	ZA/3C326-869	COIL, choke, R.F., 14 microhenries, ±2 watt	L-2	1	
5.	Z1	N-1	E514 pt. 1 & 2	ZA/3Z1086B-1	CLIP, test, 25 amp., 2.27/32-in. x 5/8-in. overall	E-2, E-3	2	
6.	Z1	N-1	F135-6	ZA/3Z1921	FUSE, FU-21, 10 amp., 25-v., Littelfuse, No. 3AG	F-1	1	
7.	Z1	N-1	D827 pt. 1	ZA/3Z3275	FUSE POST, extractor, Littelfuse, No. 1075	X-2	1	
8.	Z1	N-1	E319 pt. 1	ZA/2Z8674.40	SOCKET (HOLDERS), tube, 4 prong, No. 4, U.S. type	X-1	1	
9.	Z1	N-1, A-17	D851 pt. 2, 80994	ZA/3Z9858-8.33	SWITCH, toggle, SPST, 3 amp., 250-v., No. 2, U.S. type	S-1	1	ZA8724
10.	Z1	H-20, N-1, N-1	150777, E604, HCLUG	ZA/2C4529/T2	TERMINAL, screw, brass, electrical hd., No. 8-32 thd. x 1/4-in. with lug, cadmium plated	E-1	1	
11.	Z1	N-1	F206	ZA/2C4903A/V1	VIBRATOR, 6.3-v., Mallory, type 826	K-1	1	
12.	Z1			ZA/JAN/6X5GT/G	TUBE (VALVES), 6X5GT/G	V-1	1	

POWER(PPLY UNIT, TYPE 697, COMPLETE (ZA/3H('6-1)

(1)	(2)	(3)	(4)	(5)	(6)	(7)	(8)	(9)
Item No.	VAOS Sec.	Mfrs. Code	Piece Pt. or Dwg. No.	Catalogue No.	Designation	Sch. or Ill. No.	No. Off	Issue in Lieu
1.	Z1	N-1 S-8	E337 pt. 5 D9053	ZA/3DB8-82.1	CAPACITOR, electrolytic, 3 section, 8-8-8 mF., 475-v.D.C. wkg.	C-12, 13,14	1	
2.	Z1	N-1	SA-13Q	ZA/3C326-31Q	COIL (CHOKES), filter, 17 h. ±20%, 80 mA., 300 ohms, No. 1, U.S. type	L-2	1	
3.	Z1	C-15 N-1	150 E544 pt. 1	ZA/6Z3156	CONNECTOR, 2 pt., 8 ft., 660 w., 250-v.	P-1	1	
4.	Z1	N-1	SA-1964	ZA/USA/2019	COVERS, dust, power supply unit 697		1	
5.	Z1	N-1	E375 pt. 1	ZA/USA/2020	PANEL. steel socket mounting, 6.15/16-in. x 2.9/32-in. x 19/64-in. h.		1	
6.	Z2	N-1	G824-4	ZB/6L18208-4.8P	SCREW, steel, binding hd., self-tapping, No. 8 x 1/4-in. parkerized		4	
7.	Z1	C-6 N-1	X18 E319 pt. 1 & 2	ZA/2Z8674.40	SOCKET (HOLDERS), tube, 4 prong, No. 4, U.S. type	X2,3	2	
8.	Z1	N-1	F361	ZA/3Z9858-3.2	SWITCH, toggle, DPDT, No. 1, U.S. type ..... (Change over for transformer from 110-v. to 230-v.)	F-3	1	
9.	Z1	N-1	D851 pt. 2	ZA/3Z9858-8.33	SWITCH, toggle, SPST, 3 amp., 250-v., No. 2, U.S. type	S-2	1	ZA8724
10.	Z1	N-1	SA-1130	ZA/2Z9608-7	TRANSFORMER, power, 115/230-v., 50/60 cycles	T-1	1	
11.	Z1			ZA/JAN/80	TUBE (VALVES), type 80 ..... (1 in use; 1 spare)	D-2	2	

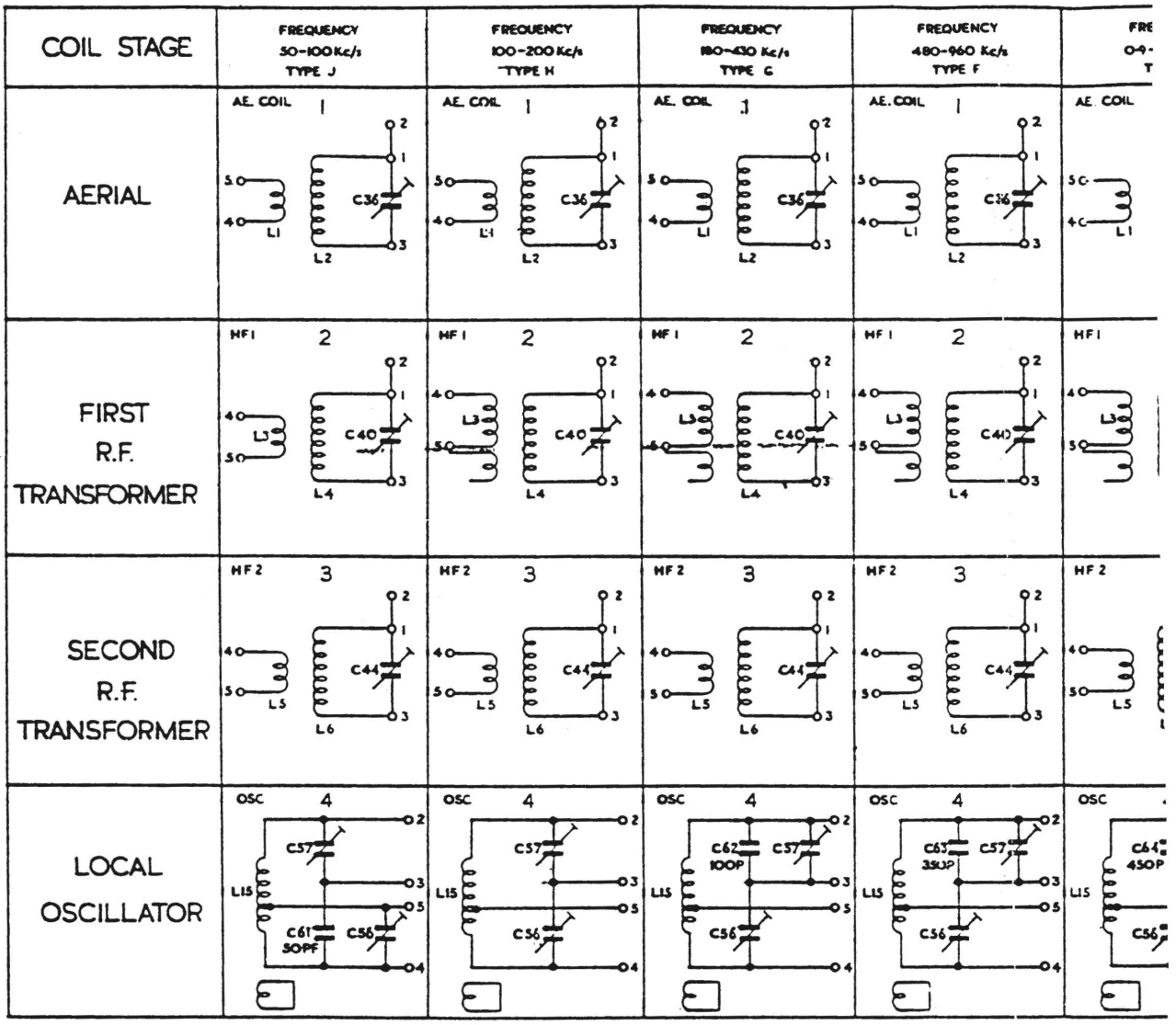

T C-162 / 1-1002

FOR VALUES OF C36, 40, 44, 56 and 57, S

Fig 1002 - Individual coil

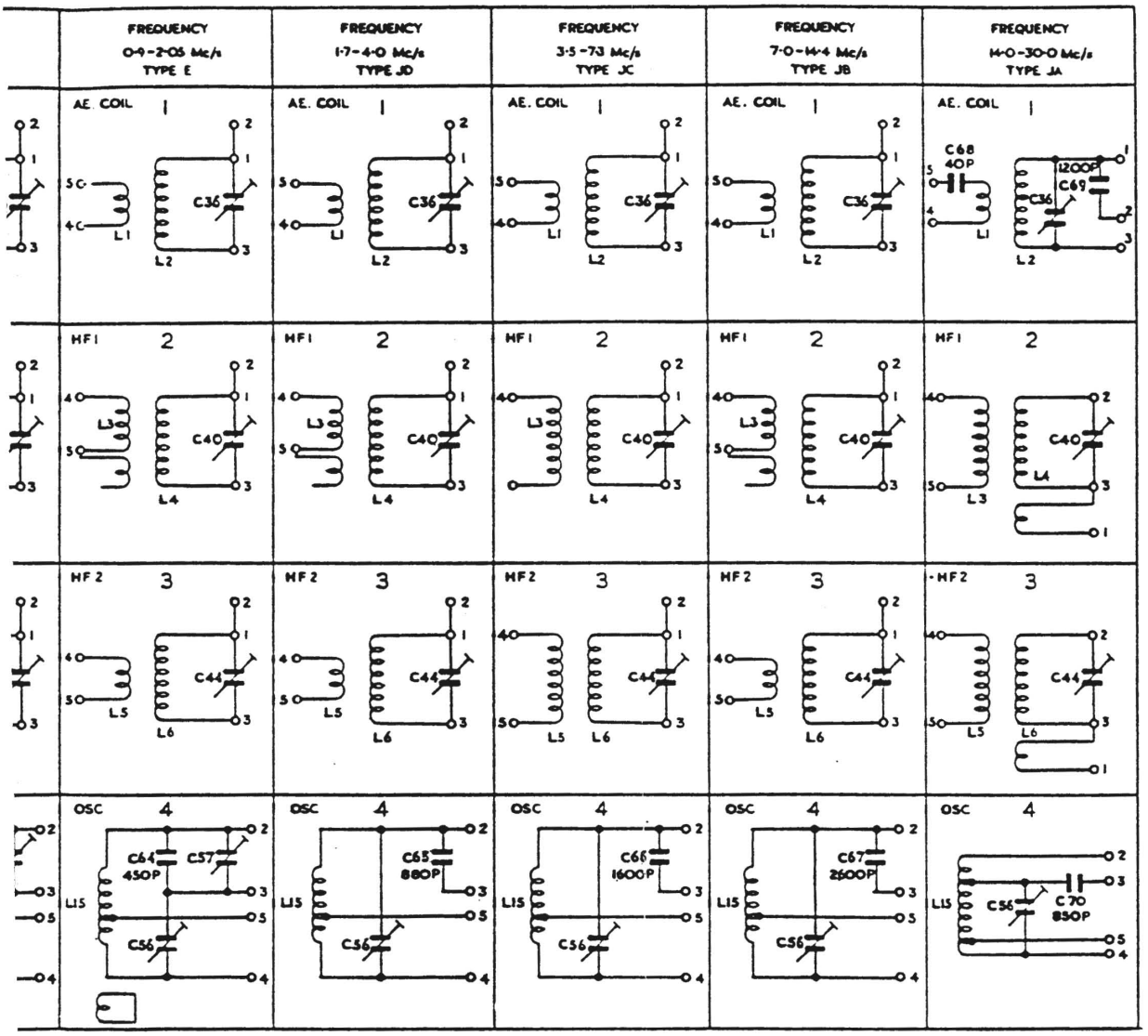

C36,40.44,56 and 57, SEE TABLE 1002

ividual coil units